# PRE INSTALLATION GUIDE

FÖRINSTALLATIONSGUIDE

ANLEITUNG VOR DER INSTALLATION

**預安裝指南**

FOR

TopJuicer scanomat

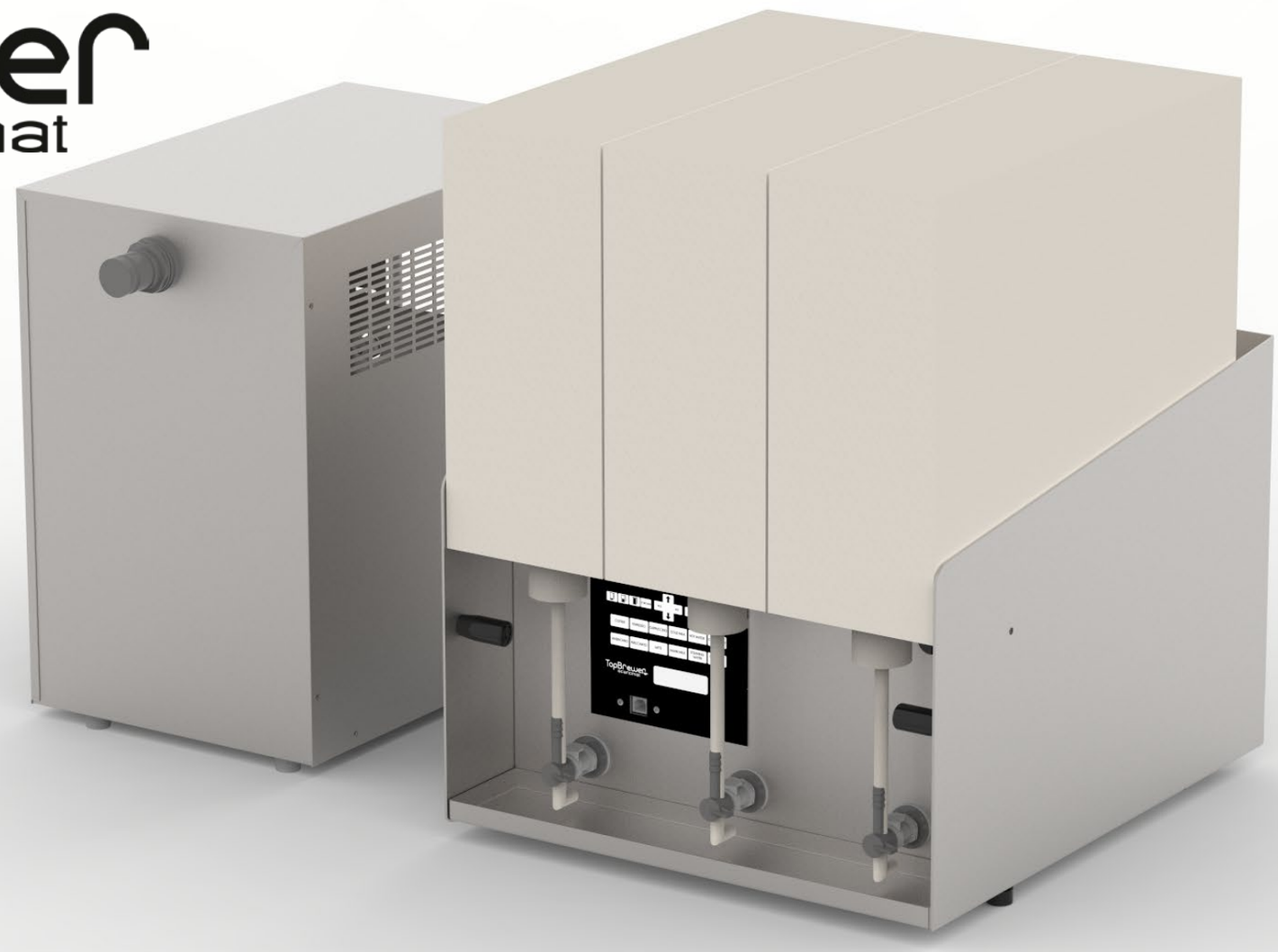

Scanomat
Download Center

Scanomat
Architect Pack
(2D/3D Files)

For TopJuicer
Version: 2.0
02-01-2020

# Products Overview

* OPTIONALLY WITH $CO_2$

| UNIT DETAILS | TJ<br>TopJuicer<br>(for concentrate) | B1<br>Cooler 45* |
|---|---|---|
| Installation Dimensions (WxDxH) | 394 x 454 x 510.5 mm | 255 x 464 x 404 mm |
| Packing Dimensions (WxDxH) | 420 x 480 x 530 mm | 265 x 483 x 464 mm |
| Weight, gross. | 30 kg | 22 kg |
| Weight, net. | 26 kg | 19 kg |
| Carton Capacityv | 3 x 10 liter | - |
| Throughput/hour | 50 liter | 45L |
| Approvals | CB | CE, ETL/UL, NSF |
| Power | **EU**<br>230-240V, 10 Amp 3-pin plug point for each unit.<br><br>**For Canada & US:**<br>115V, 60 Hz, 10 Amp, plug point for each unit. | |
| Water | Direct Water Connection, 3/4" type shutoff valve<br>Water pressure: 200kPa (2 Bar) - 600 kPa (6 Bar) | |
| Filtration | **Areas with very hard water (above 15 dh°)**: C150 or C300 filter + 50% bypass<br><br>**All other areas:** ActiveCoal 10.000 Filter for purifation | |
| Drainage | Waste U-pipe, ø40mm. Manifold/drain plug (included, see Plumbing section) is inserted and components are connected here. | |
| Ventilation | Duct Fan Ventilation required. Cooler produces a lot of heat, which needs to be able to exit as per installation instructions in Carpenter section | |

## TopJuicer

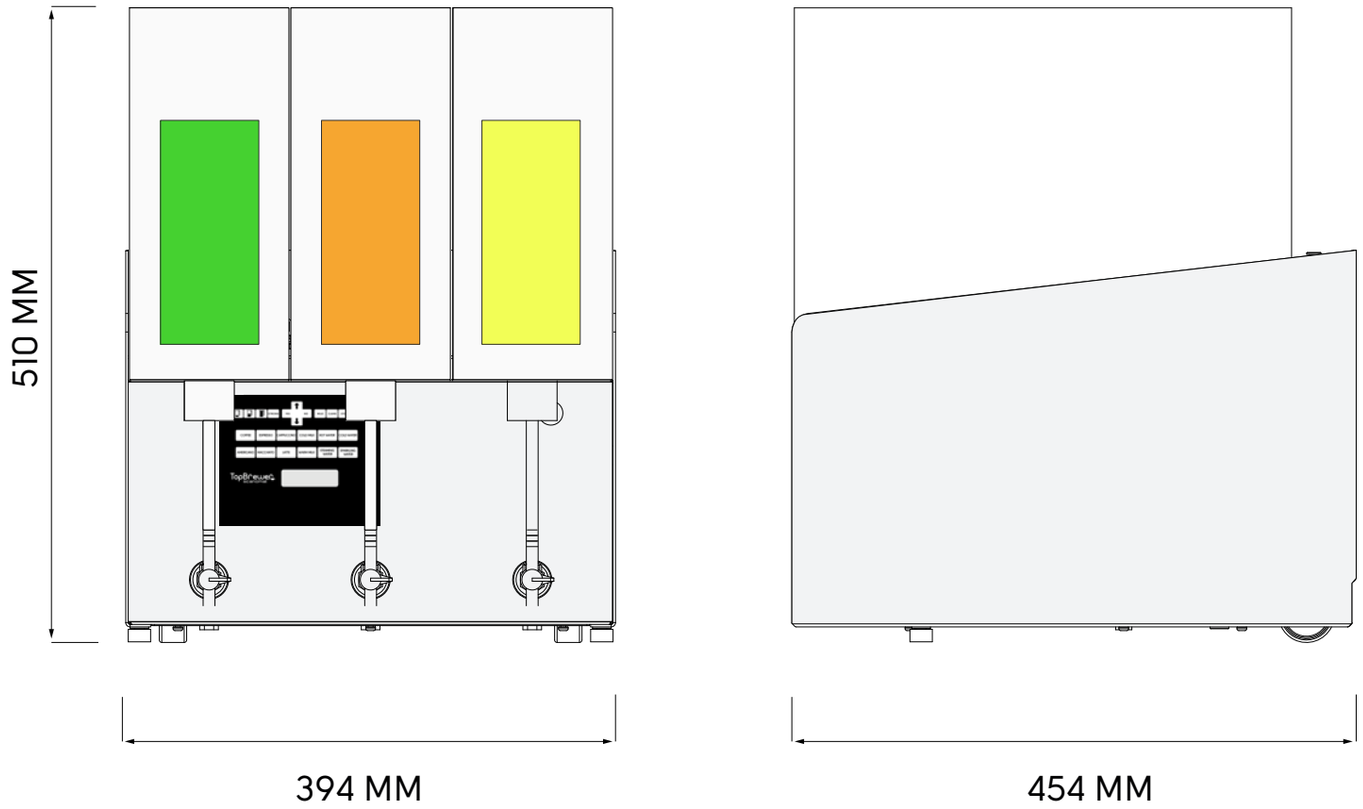


## Water cooler (B1)

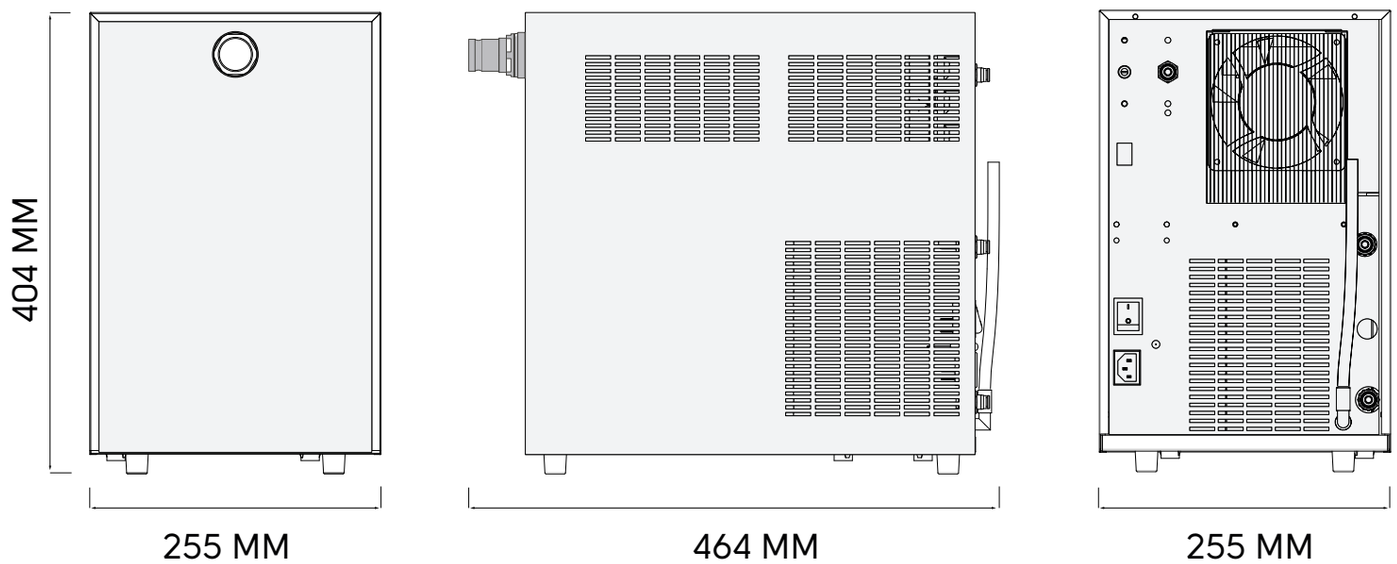

# CARPENTER

# SNICKARE

# ZIMMERMANN

# 木匠

Carpentry preperations

# Basic Installation

Ventilation pipe through toekick using SKU 4302774

# Example 1

Using: TJ + B1

AIR EXHAUST SHOULD REMAIN UNOBSTRUCTED

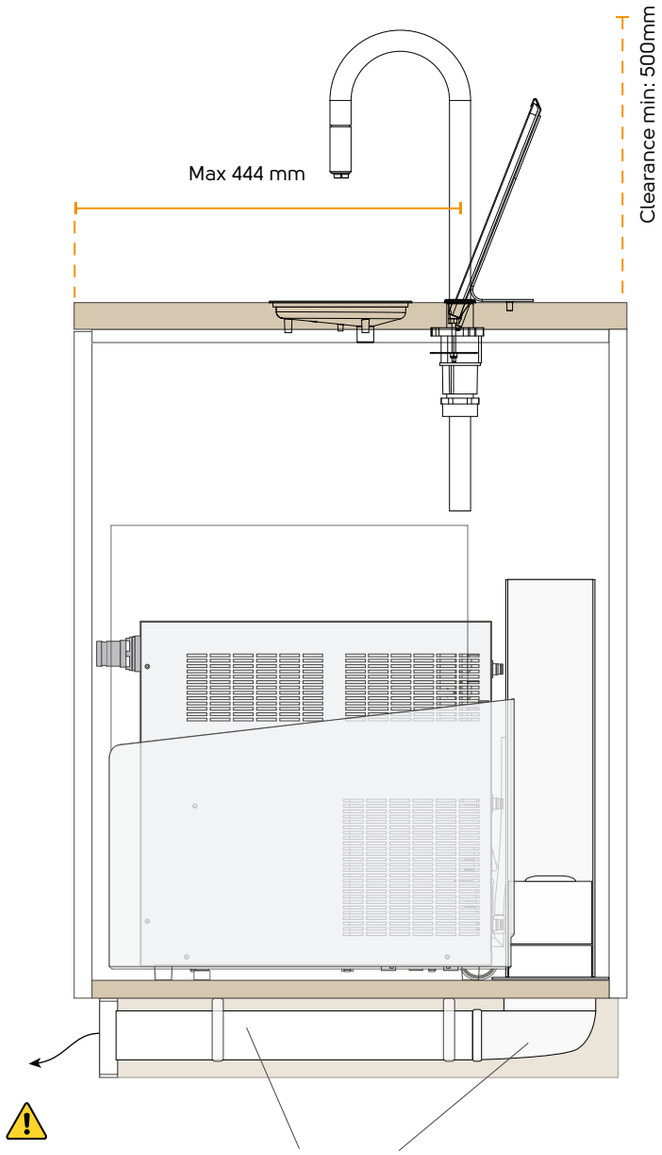


Side

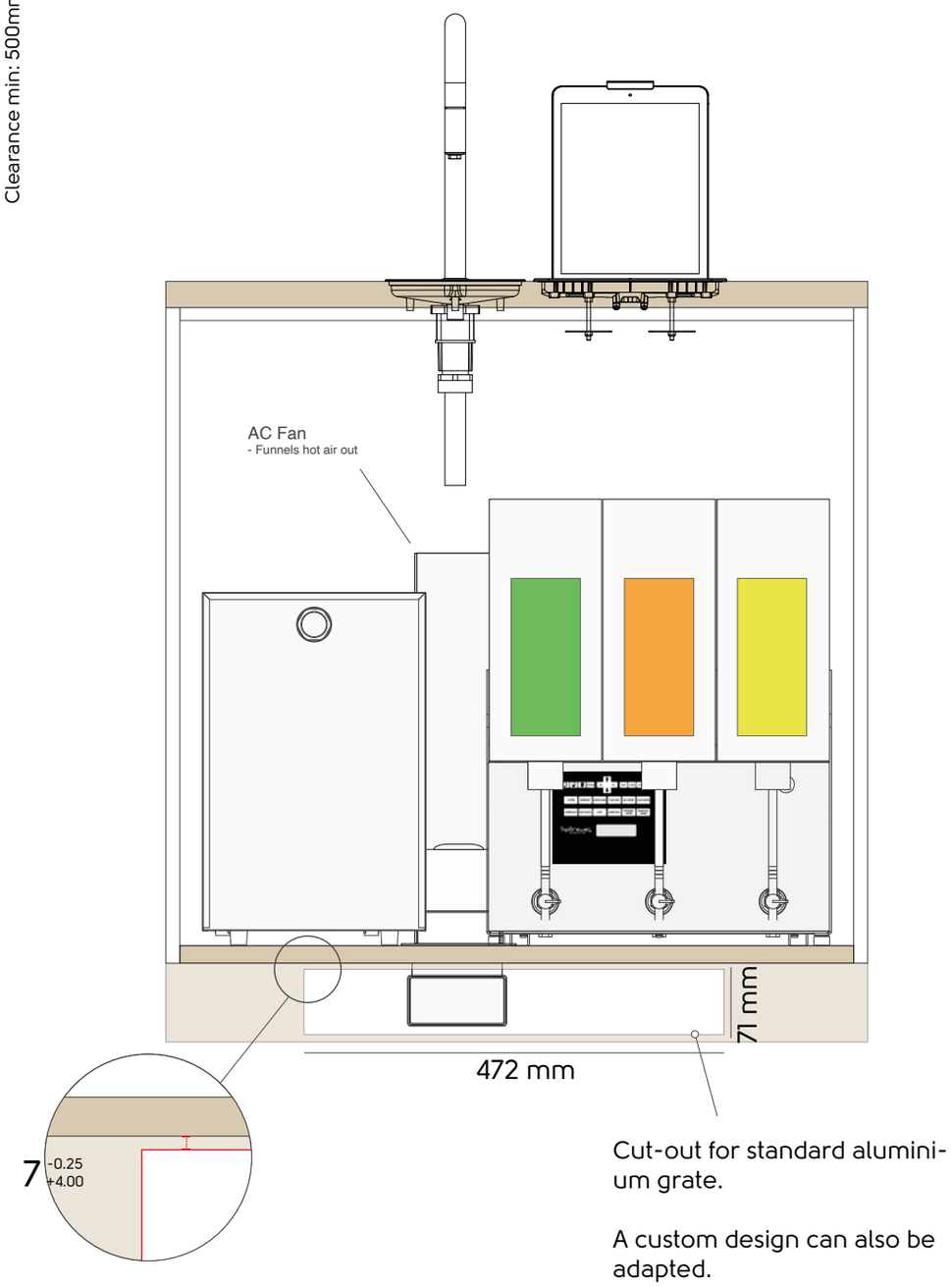


Front

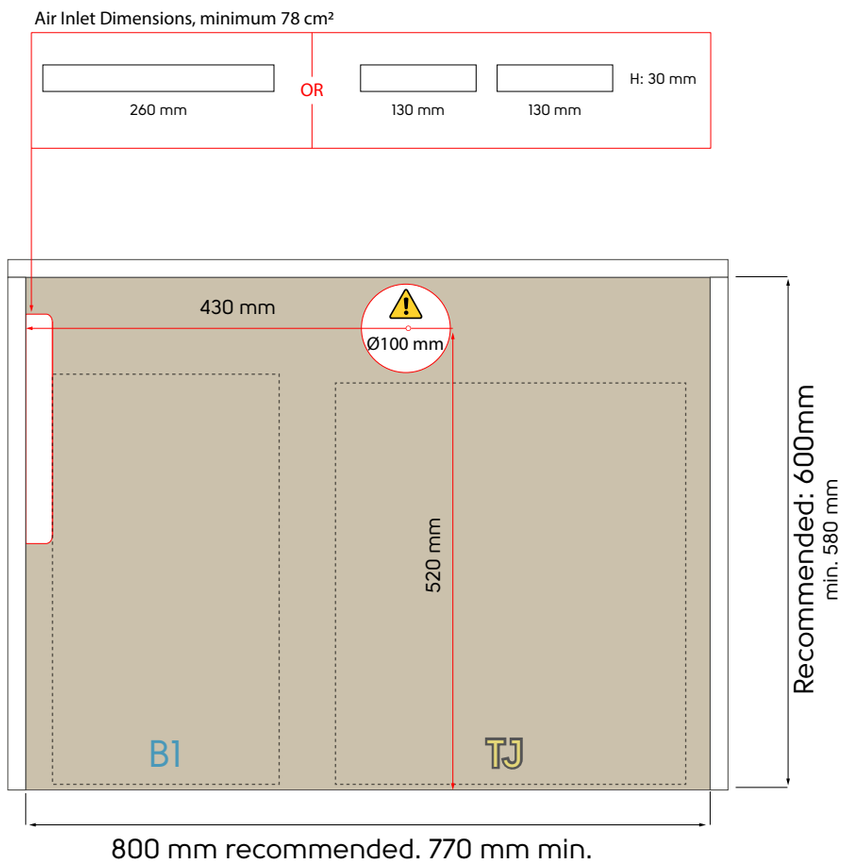


Top View

Carpentry preperations

# Special Installation

Special example of behind-the-wall utilizations

CLICK HERE TO
SEE EXAMPLE

## Example 1

Using: TJ + B1

AIR EXHAUST
SHOULD REMAIN
UNOBSTRUCTED

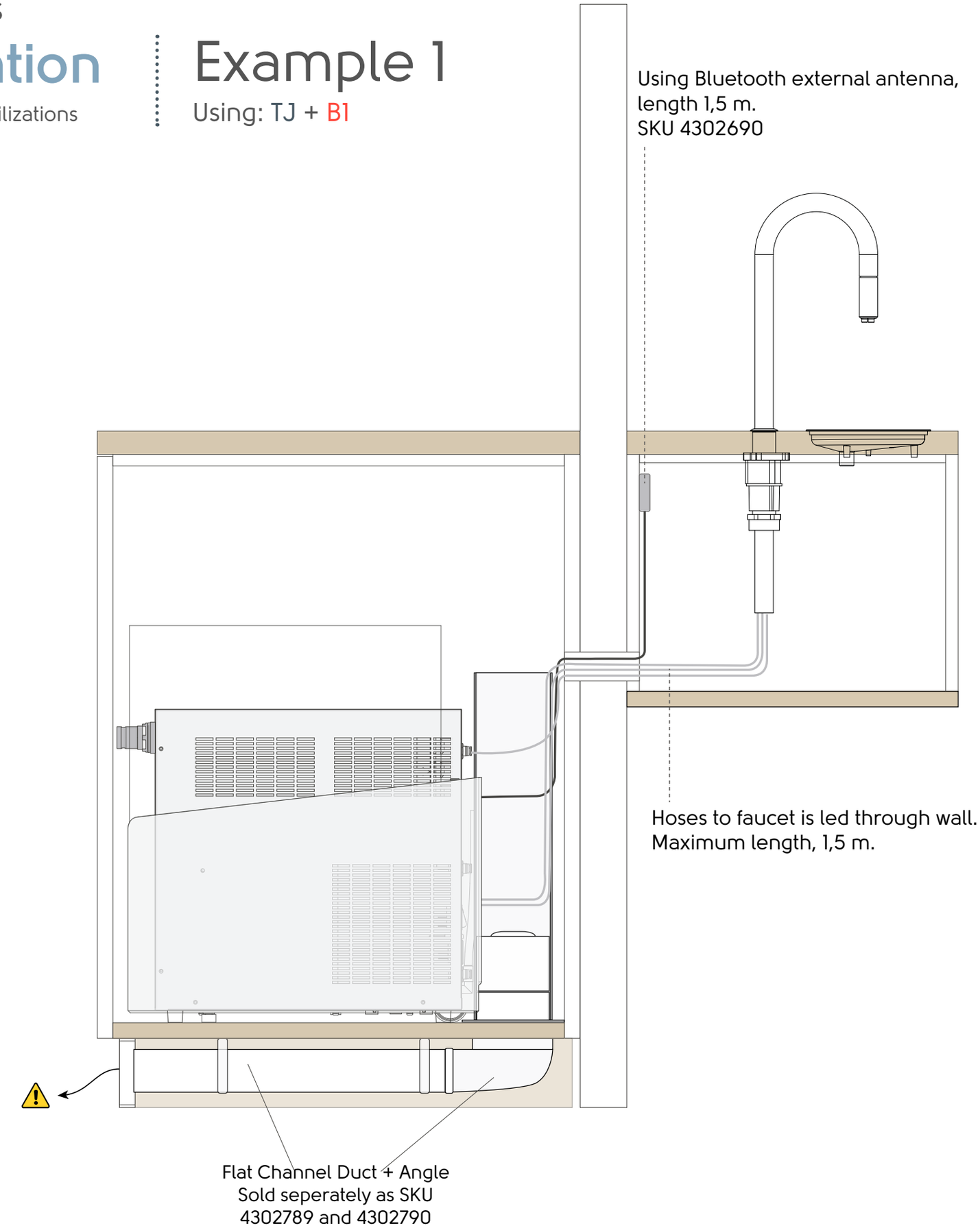

# Swan Neck & Driptrays

## Overview of positioning

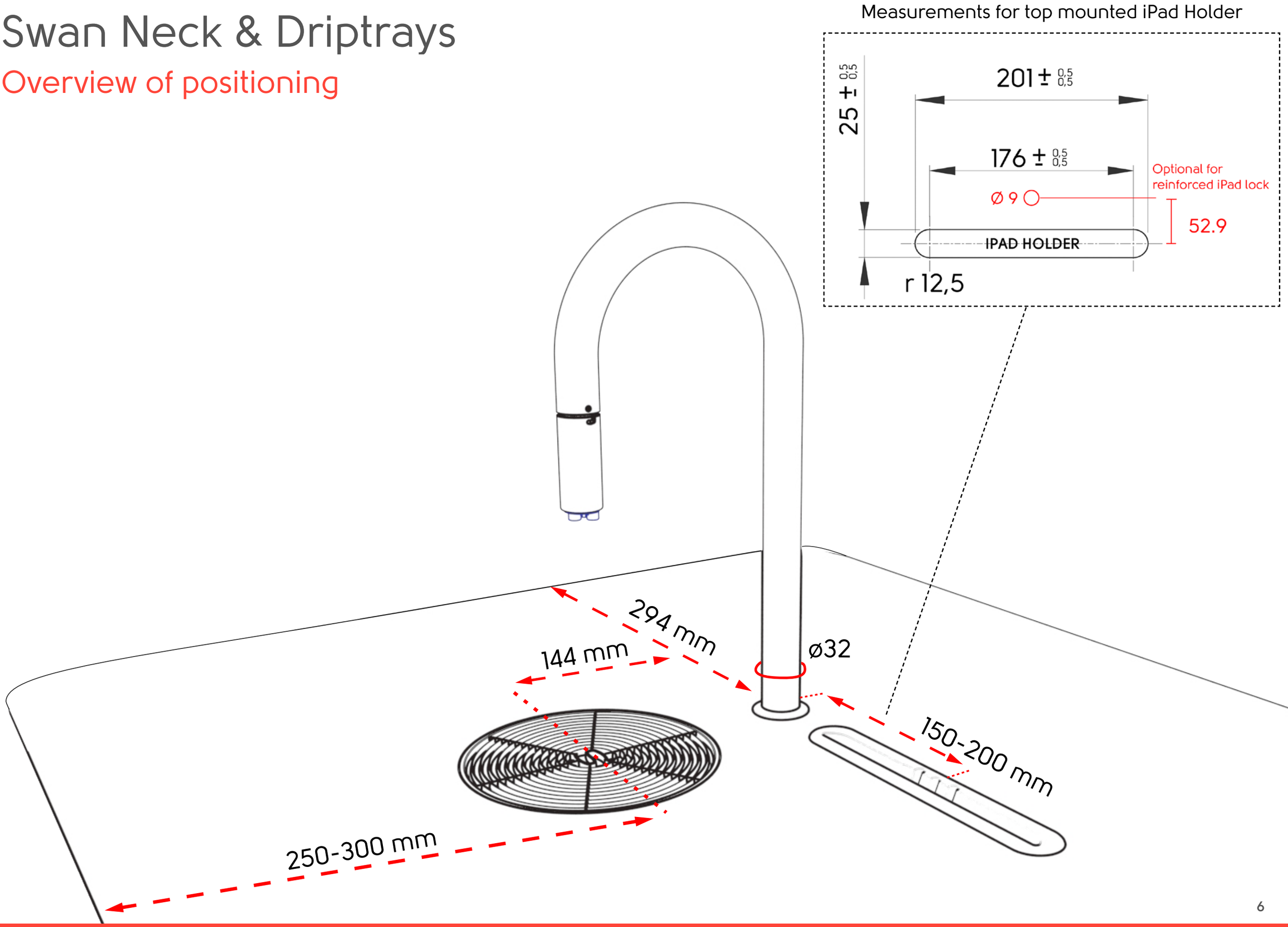

# TopBrewer topmounted iPad Holder + Lock

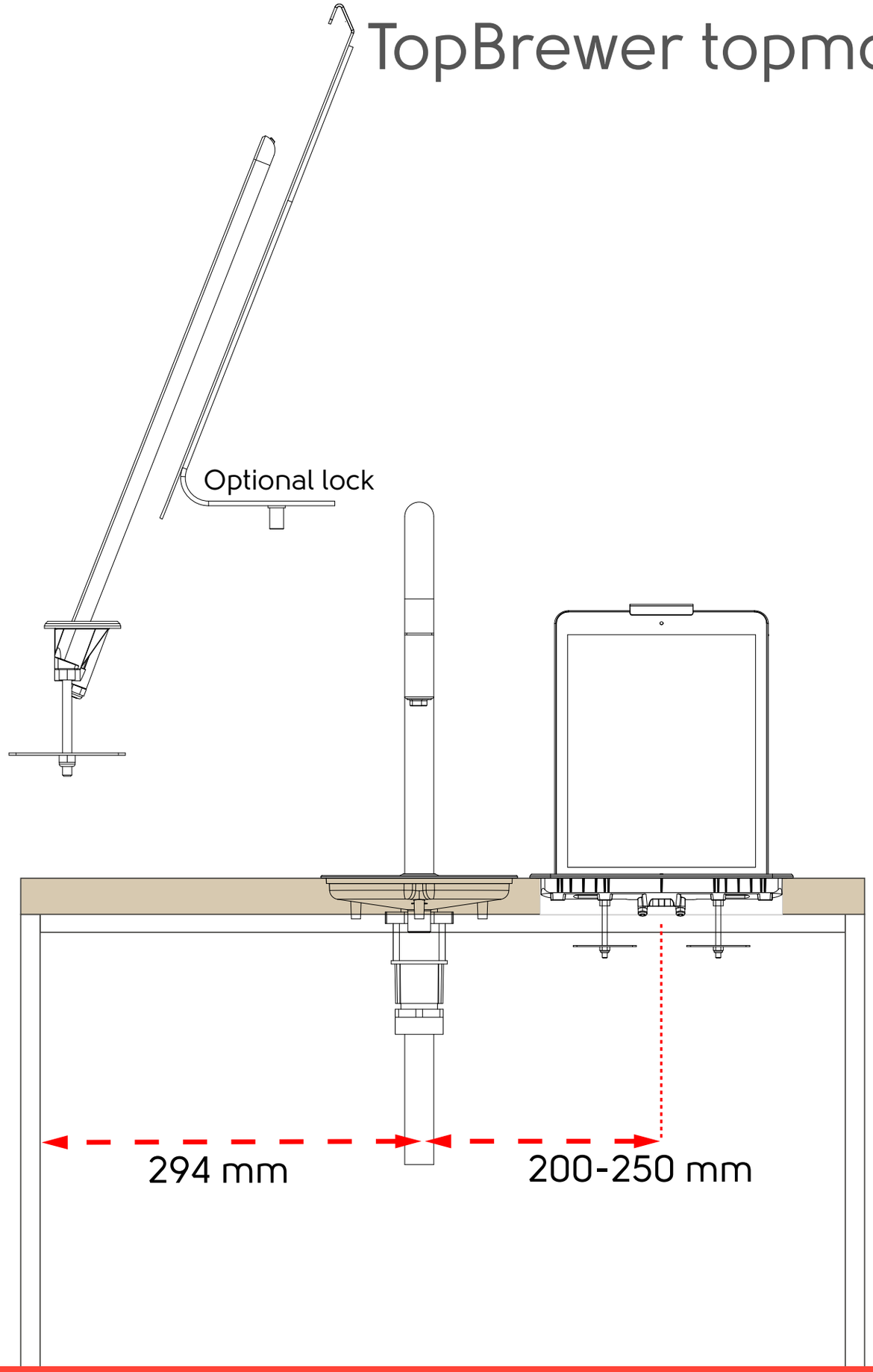


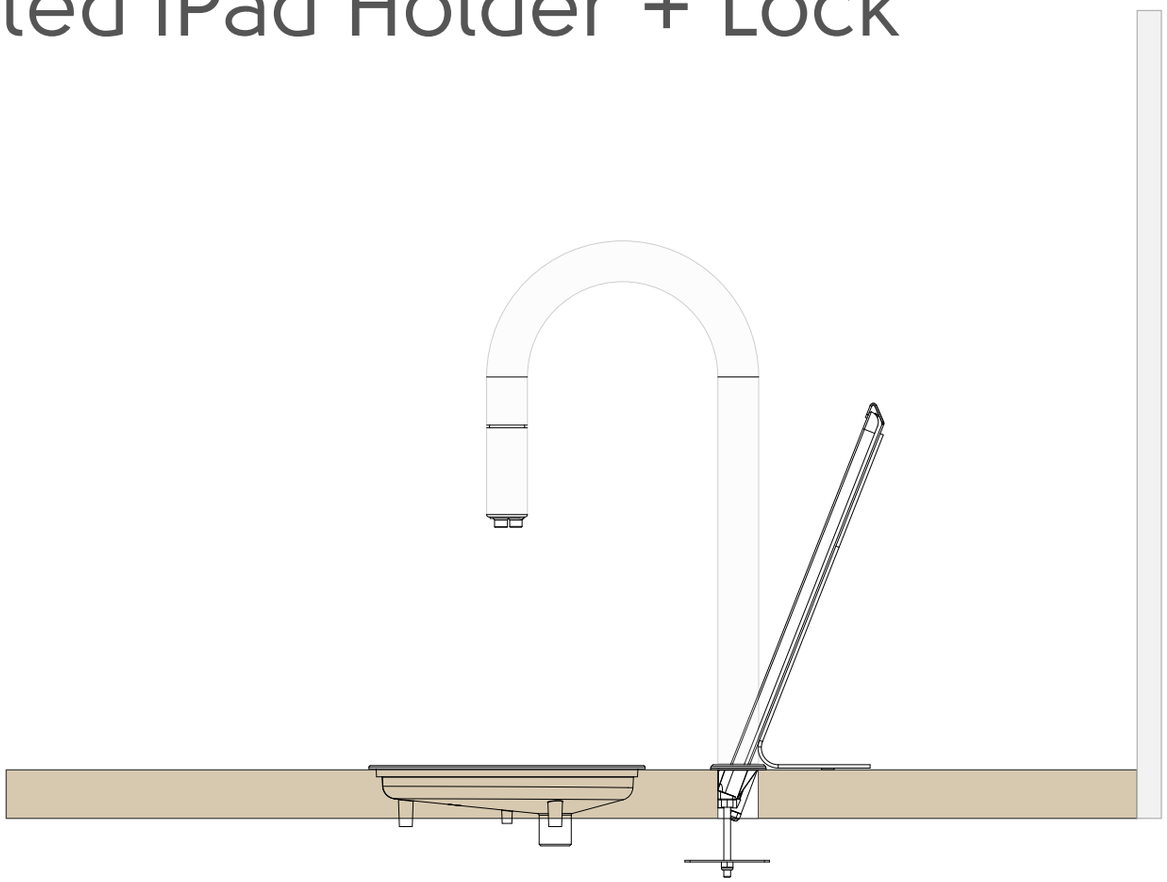

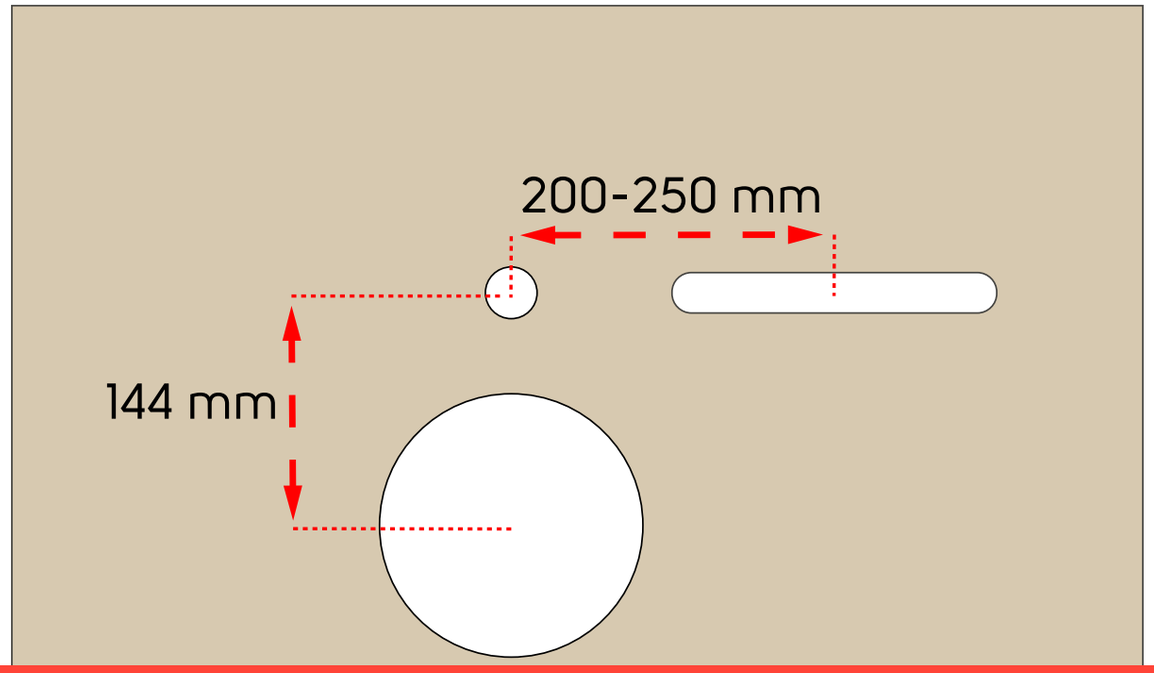

# BOXIT (Table Mount or Wall-Mount options)

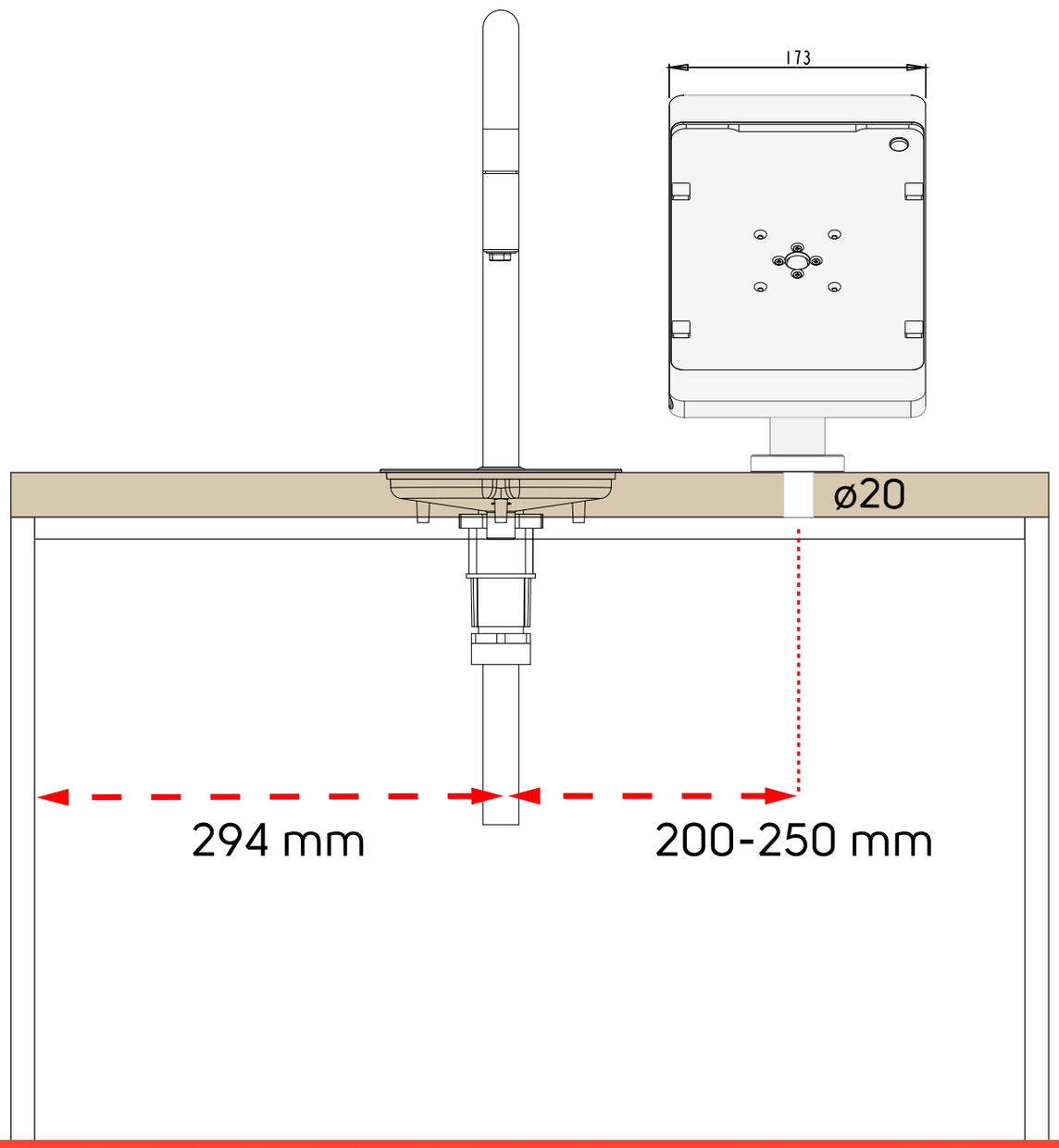


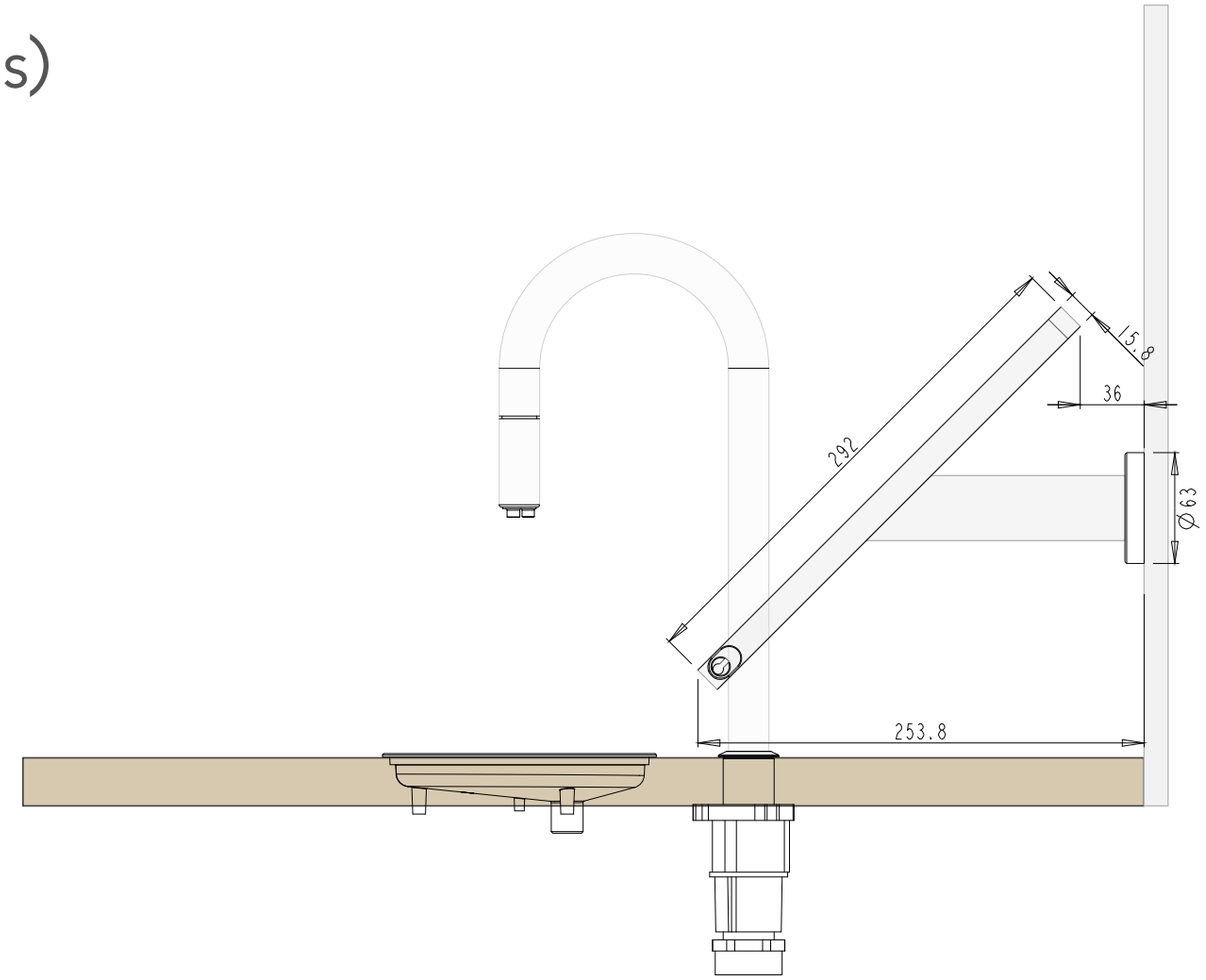


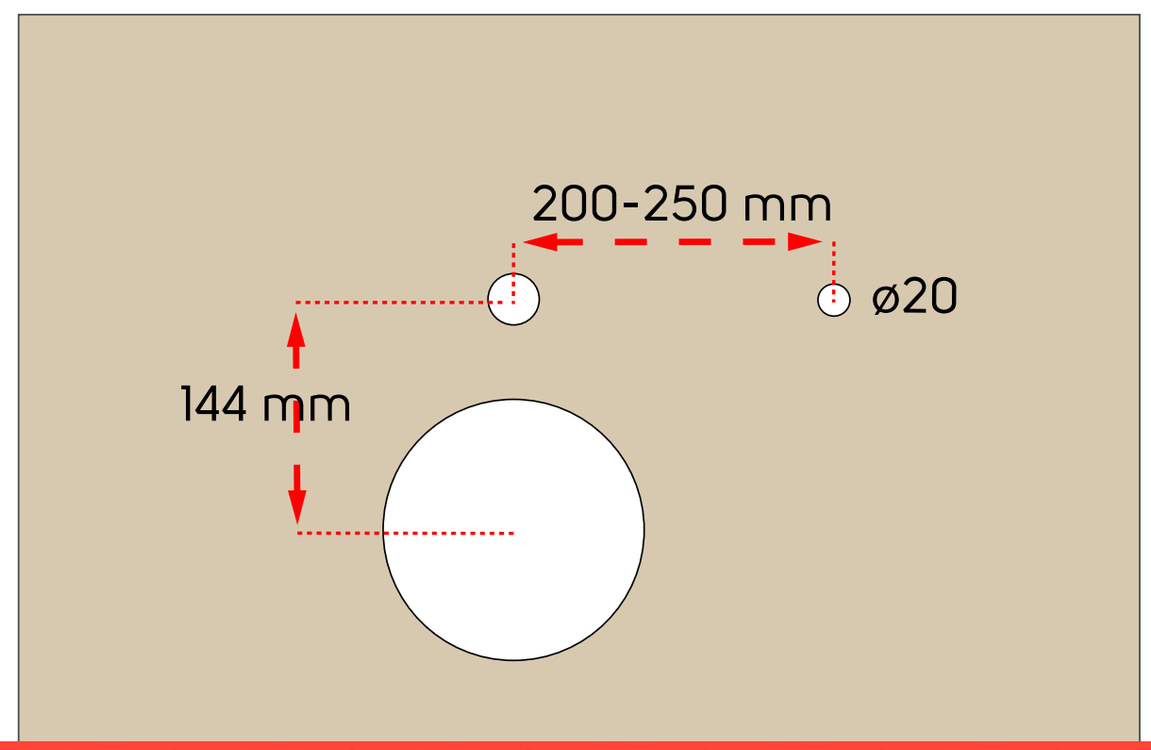

# TopJuicer with pushbuttons

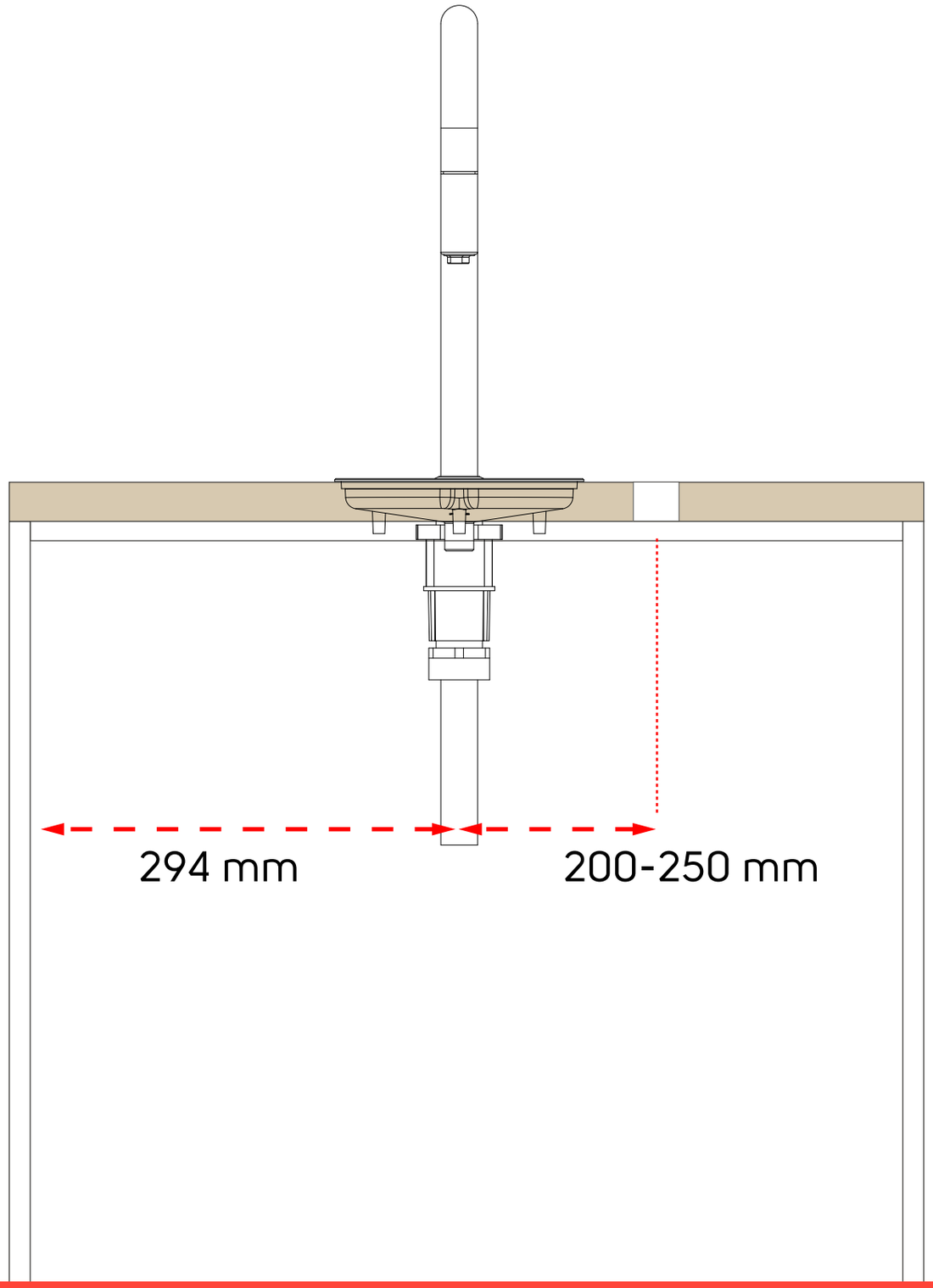


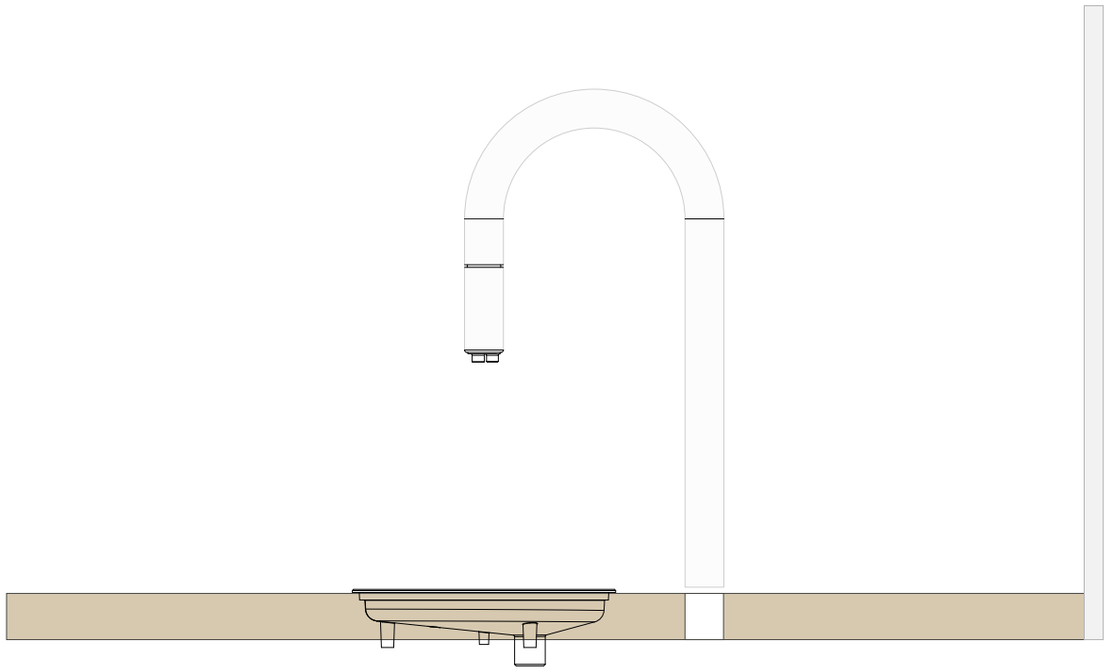

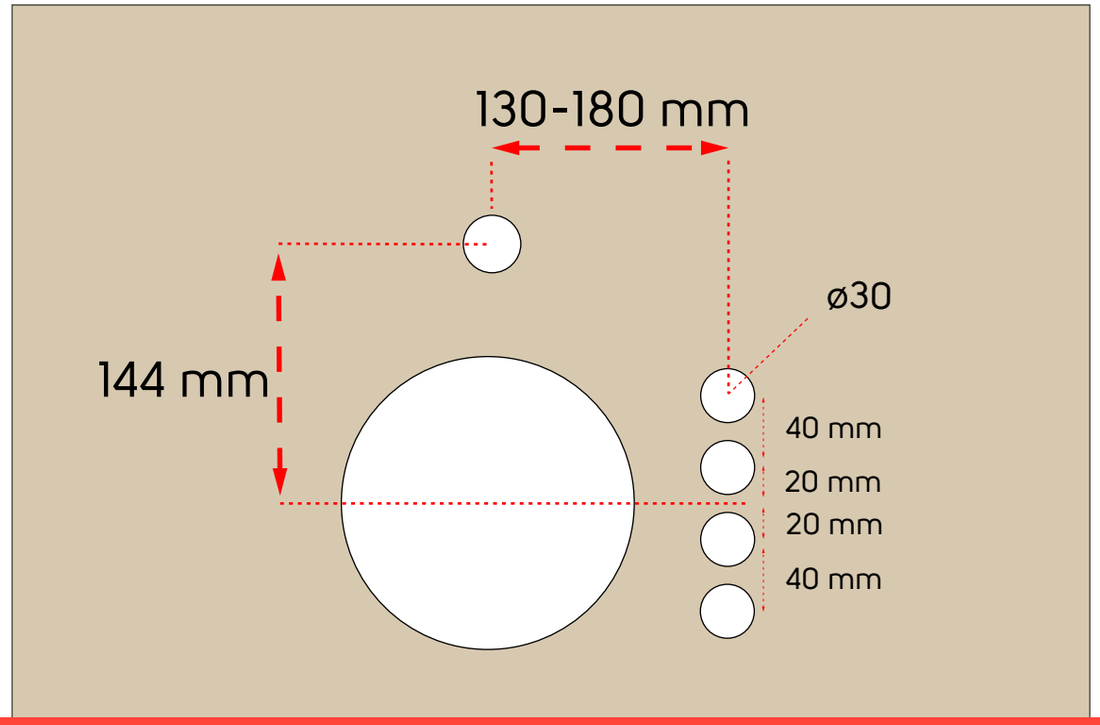

# Cut out sheet - Swan neck + Driptray

**NOTE** that this driptray is best used for water resistent tabletops such as Granite, Marble or Corian. If wood, make sure poures are completely sealed.

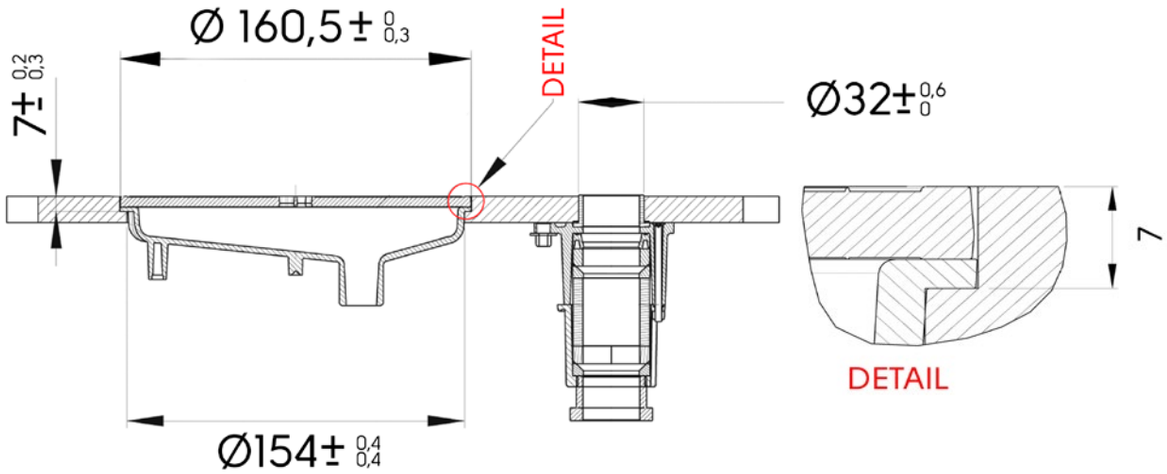


SIDE

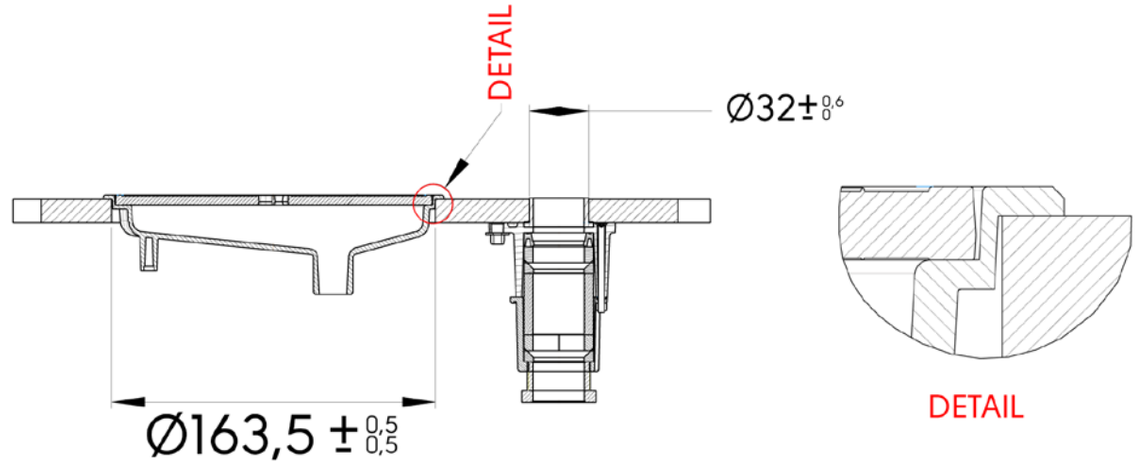


SIDE

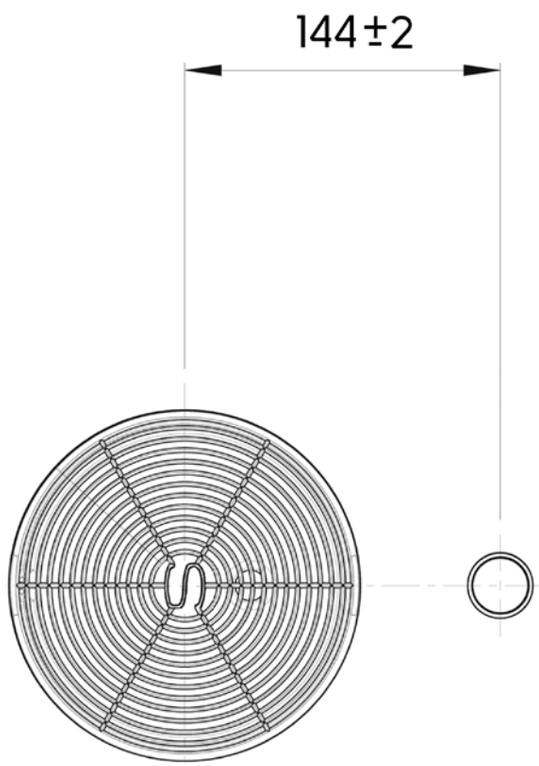


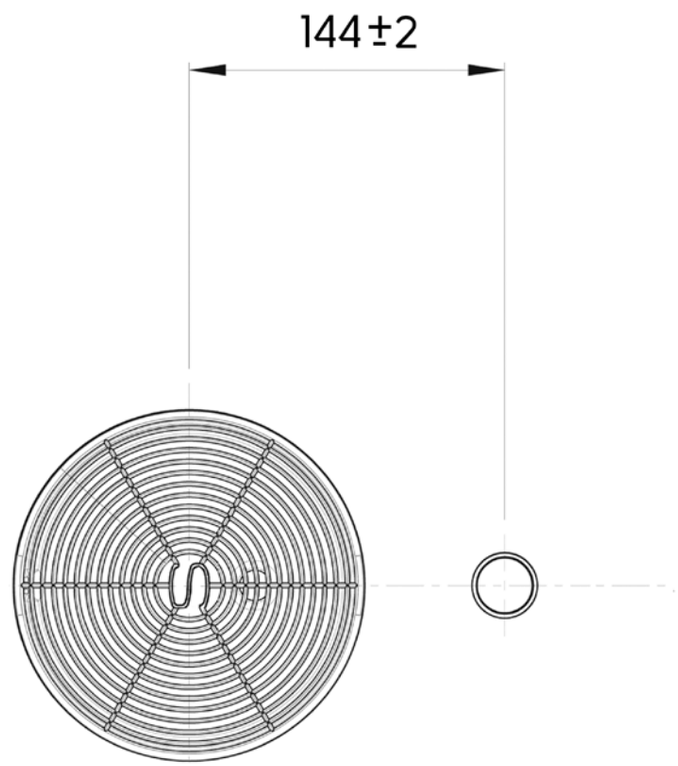


TOP

**Flush mounted**
- Countersunk -
Driptray 2006162

1

**Top mounted**
- With Lip -
Driptray 2006162_A

2

# ELECTRIC

# ELEKTRISK

# ELEKTRISCH

# 電的

# Electrical Requirements

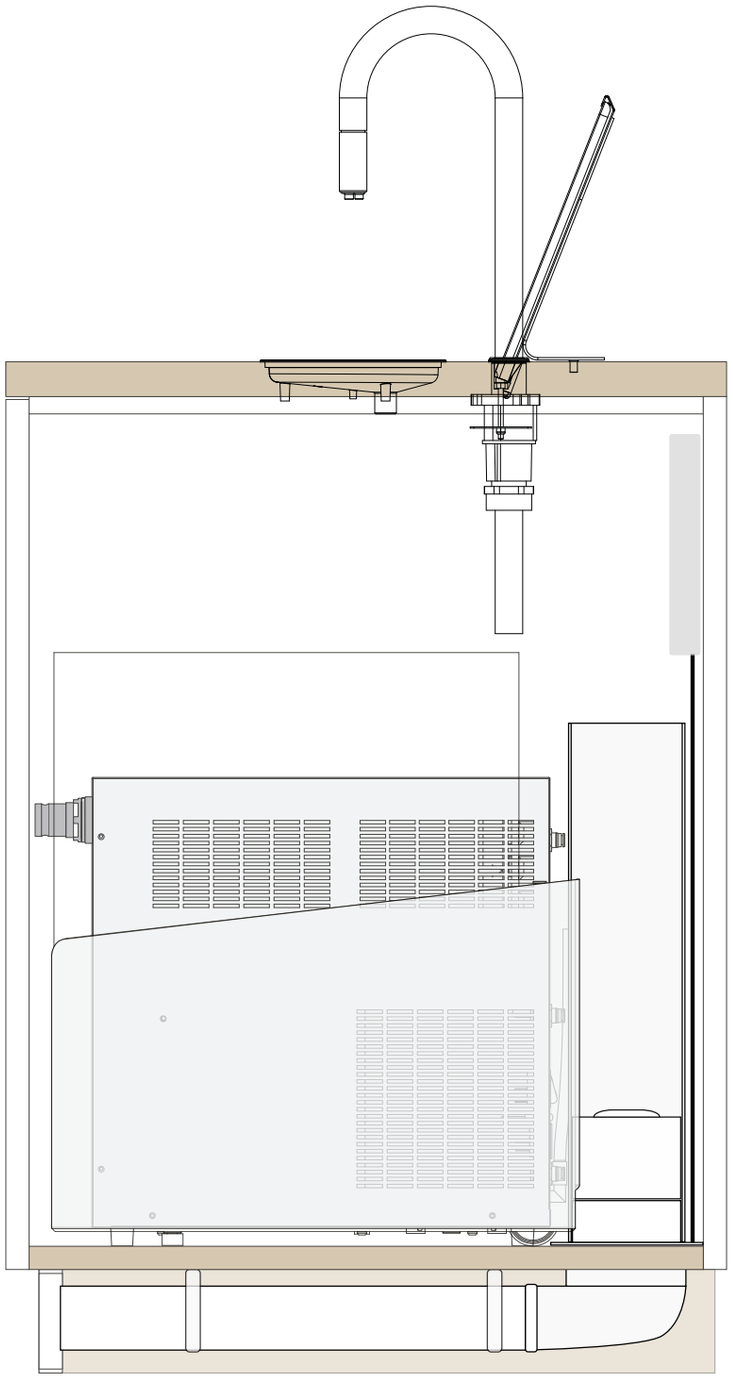

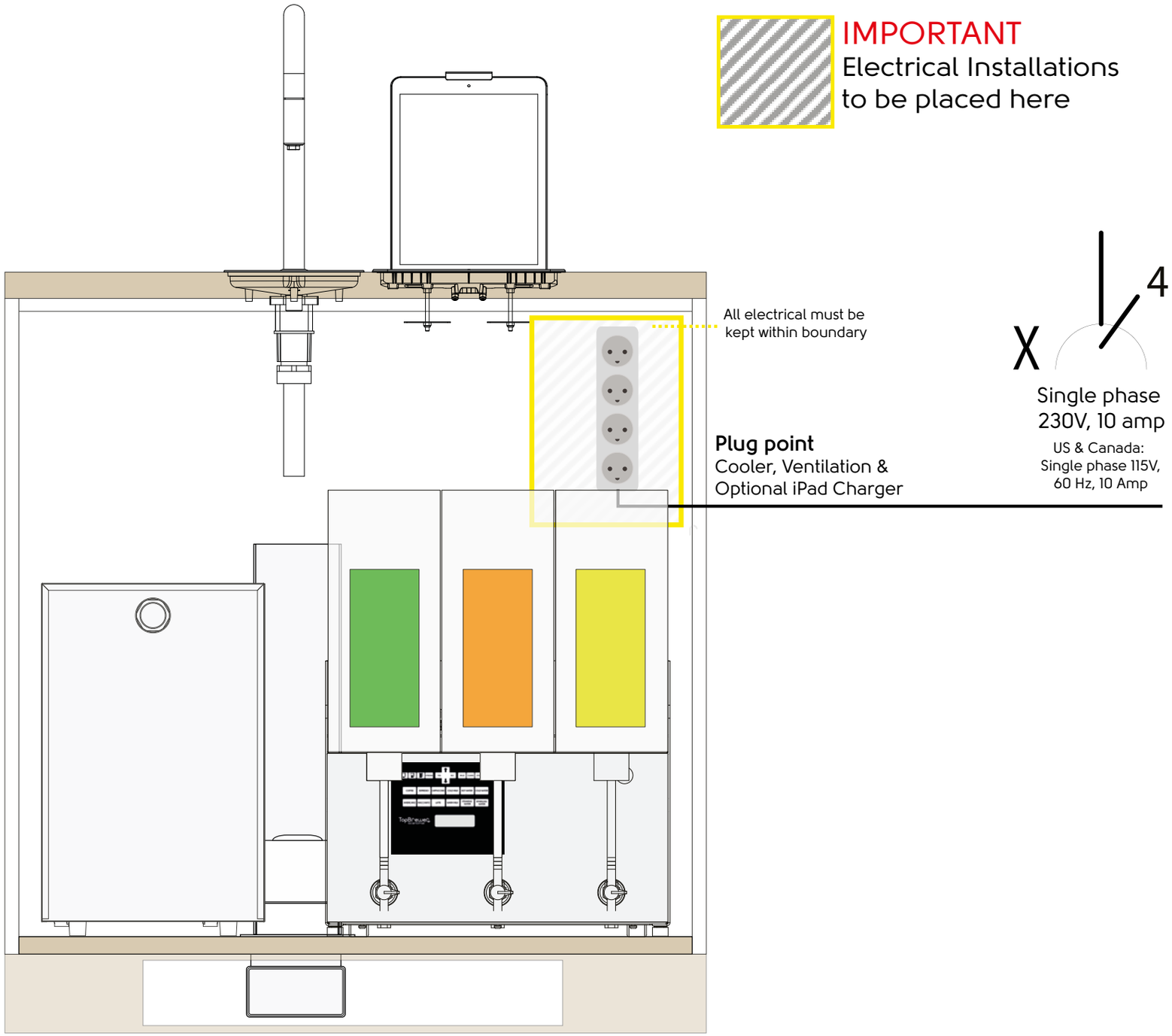

# PLUMBING

# VVS

# KLEMPNERARBEITEN

# 水暖

# Plumbing - adjacent cabinet

## Filters

Filters are chosen based on the projected usage pattern of the machine. Distance of installation relative to the machine are unlimited. An example of the capacity is listed below.

### Capacity:

Example: 30% bypass, °dH. 15

C150: 1390 l.
C300 2310 l.
C500: 2926 l.

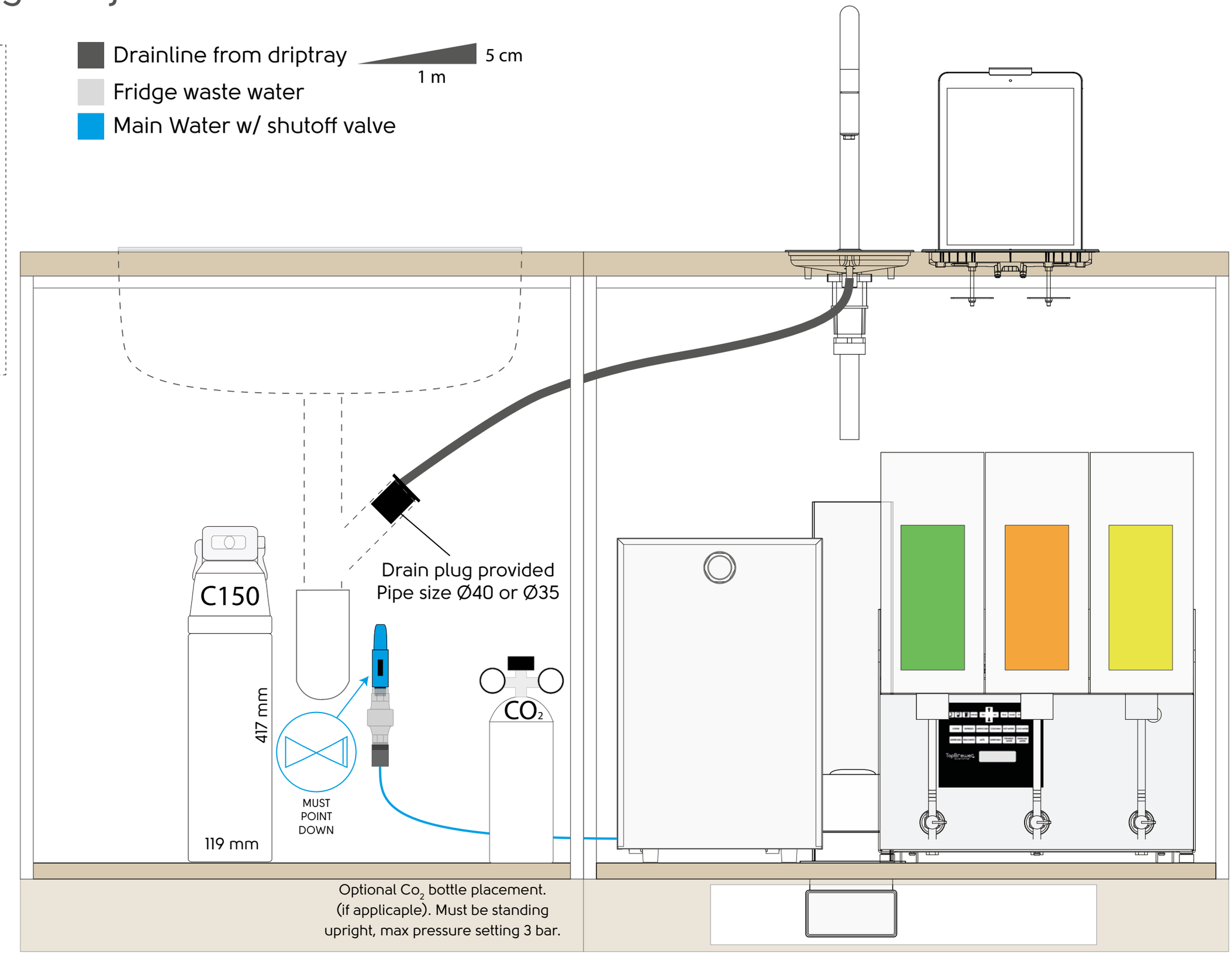


*Optional units

# scanomat

coffee solutions for more than 50 years

For more information & questions to your installation,
contact us on the below channels

**Tecnical / Architect Support**
E-mail: support@scanomat.dk
Chat: www.scanomat.com
International: +454918180
Denmark: +4549181212
Sweden: +46 (0)774 41 0000
Norway: +47 22662210
UK: architect@scanomat.co.uk

Locate Dealer: scanomat.com/services/partners

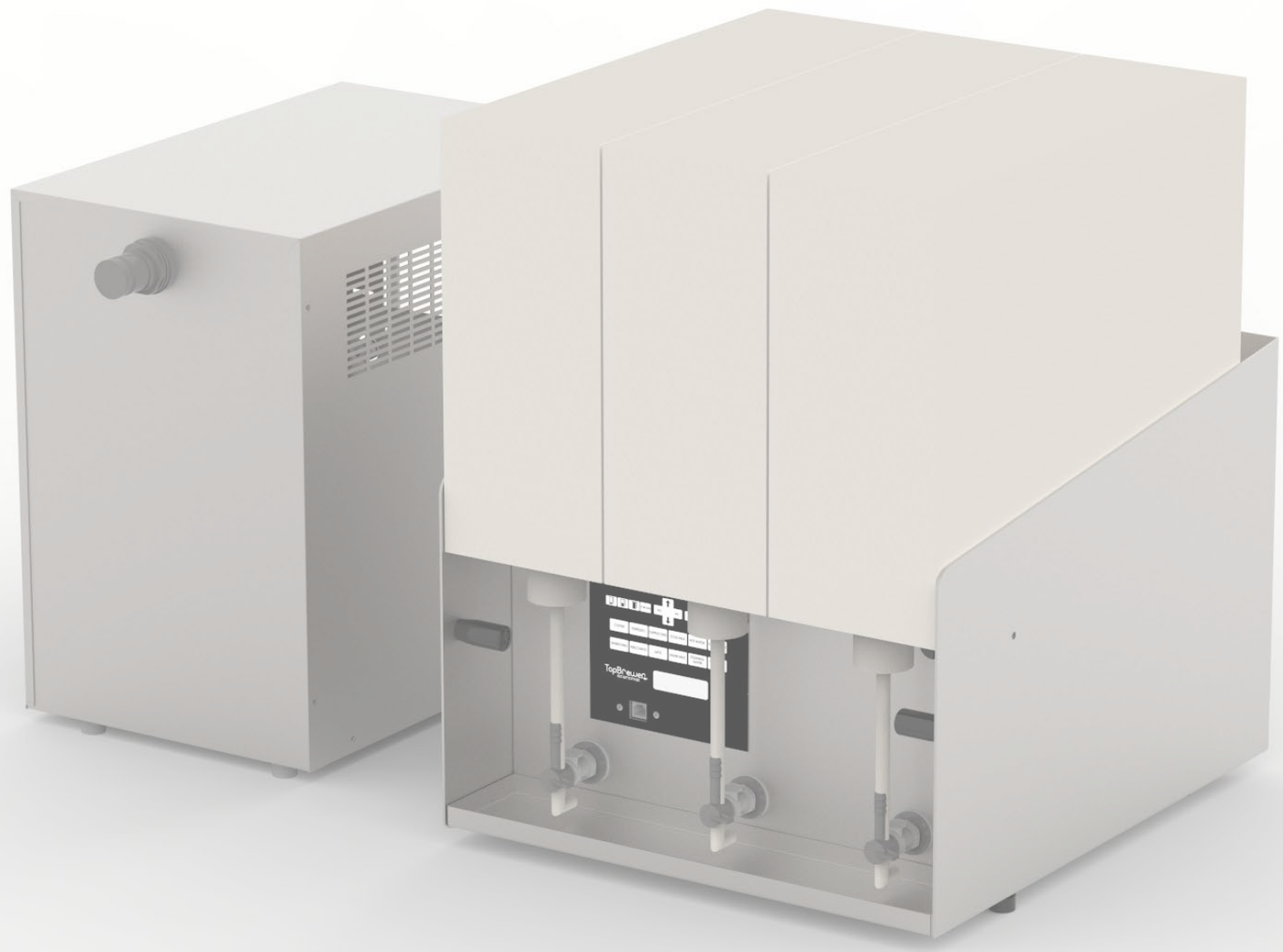

For TopJuicer
Version: 2.0
02-01-2020