PRE INSTALLATION GUIDE

FÖRINSTALLATIONSGUIDE

ANLEITUNG VOR DER INSTALLATION

預安裝指南

FOR

TopWater scanomat

Scanomat
Architect Pack
(2D/3D Files)

For TopWater
Version: 1.0
01-02-2020

Carpentry preperations

Basic Installation

Ventilation pipe through toekick using SKU 4302774

Example 1

AIR EXHAUST SHOULD REMAIN UNOBSTRUCTED

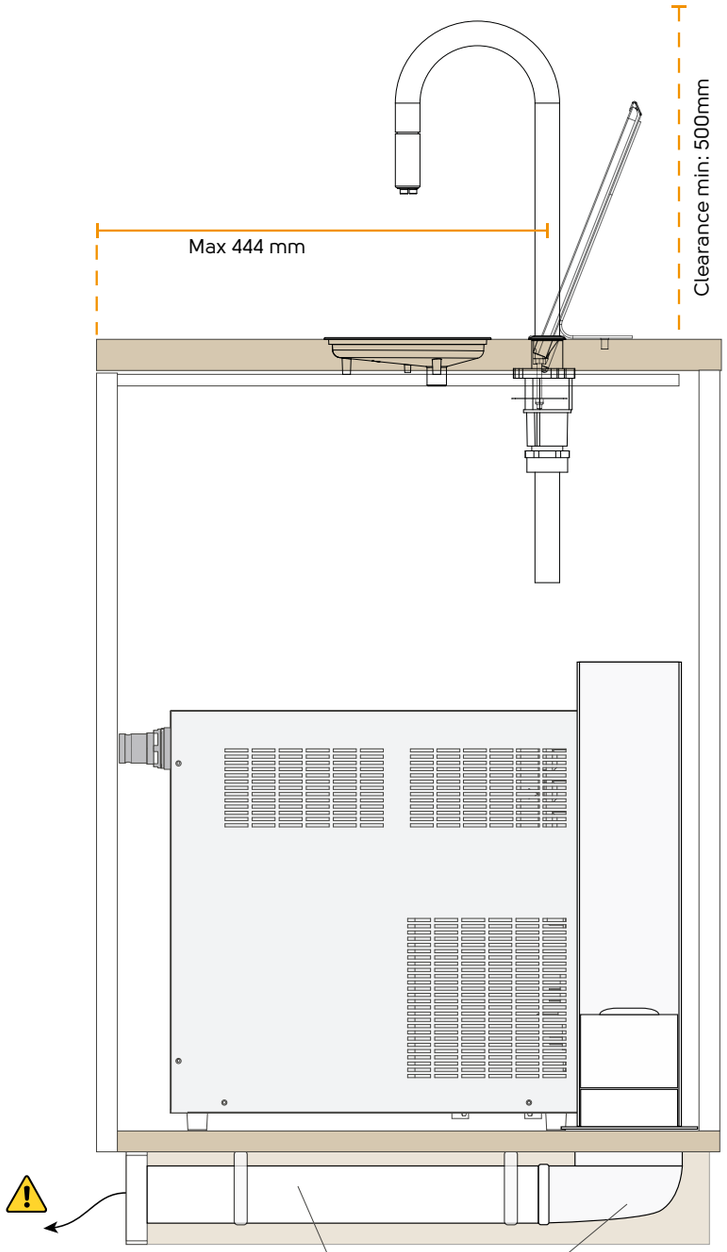

Flat Channel Duct + Angle
Sold seperately as SKU
4302789 and 4302790

Side

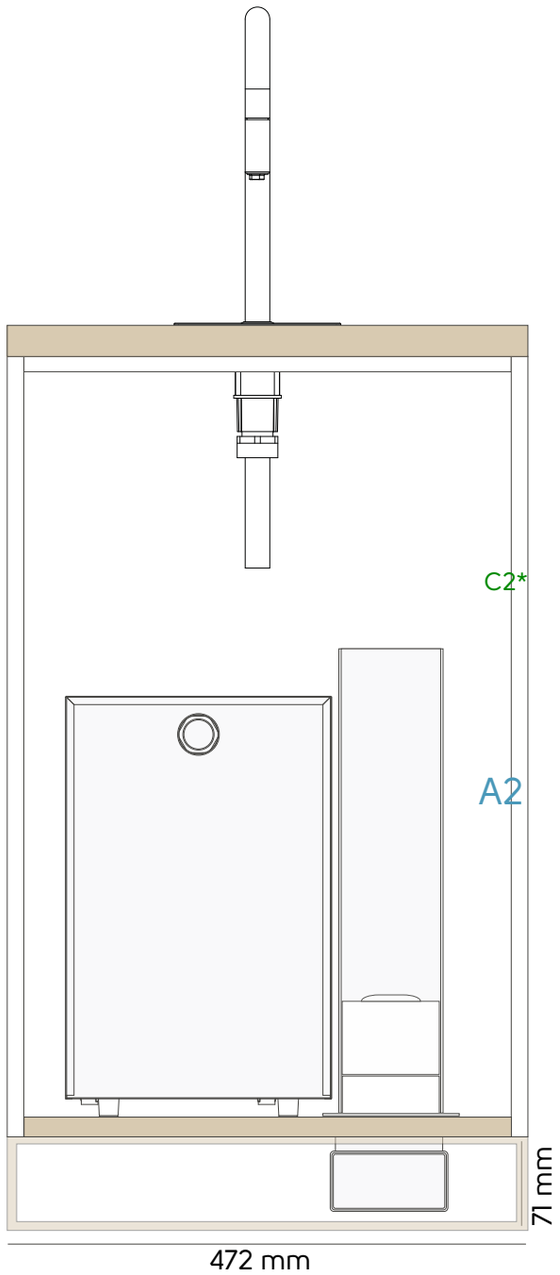

Cut-out for standard aluminium grate.

A custom design can also be adapted.

Front

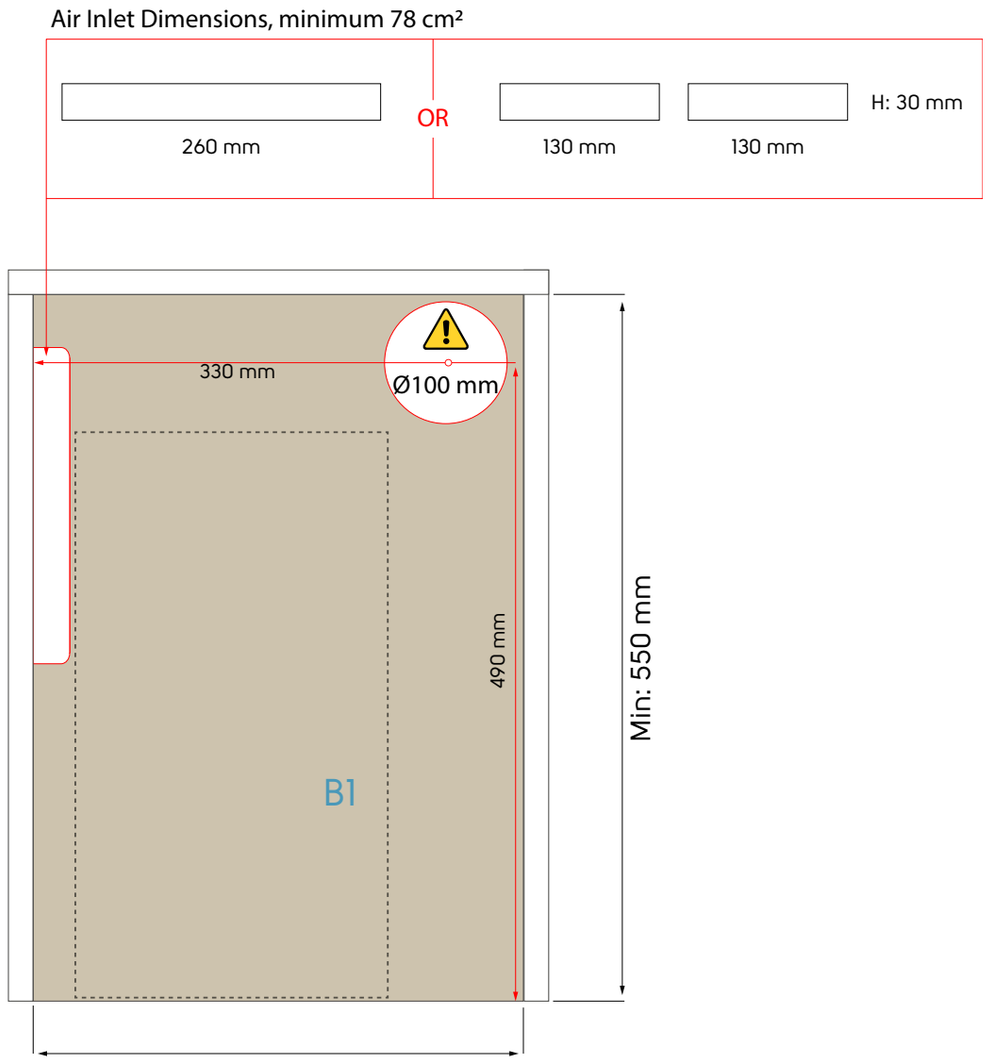

Top View

Carpentry preperations

Basic Installation

Ventilation pipe through toekick using SKU 4302774 + flex tube

Example 2

AIR EXHAUST SHOULD REMAIN UNOBSTRUCTED

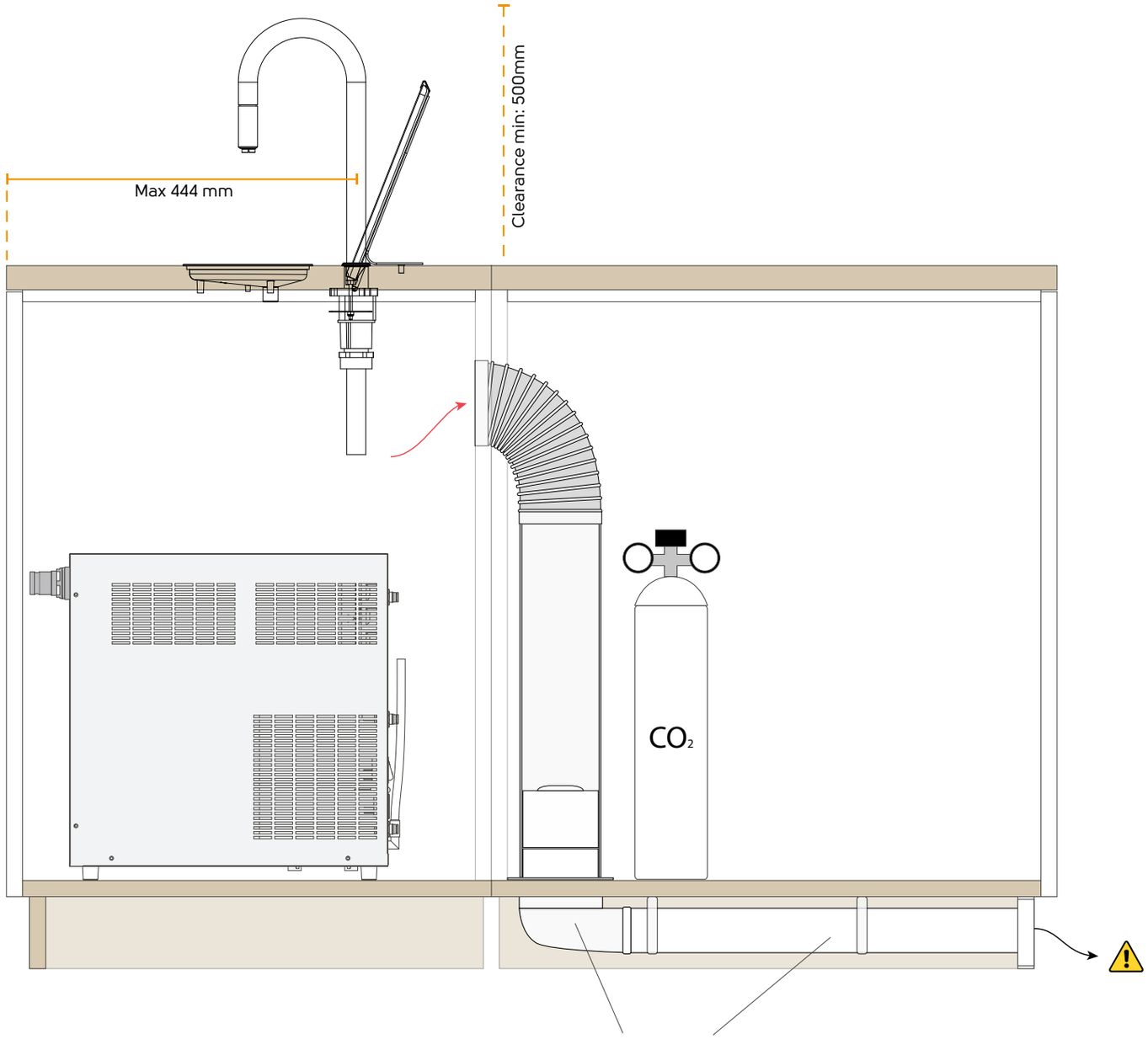

This configuration, using a flextube, allows for exhaust diversion to an adjacent cabinet. Shown is an example. Also used is flat Channel Duct + Angle. Sold seperately as SKU 4302789 and 4302790

Air Inlet Dimensions, minimum 78 cm²

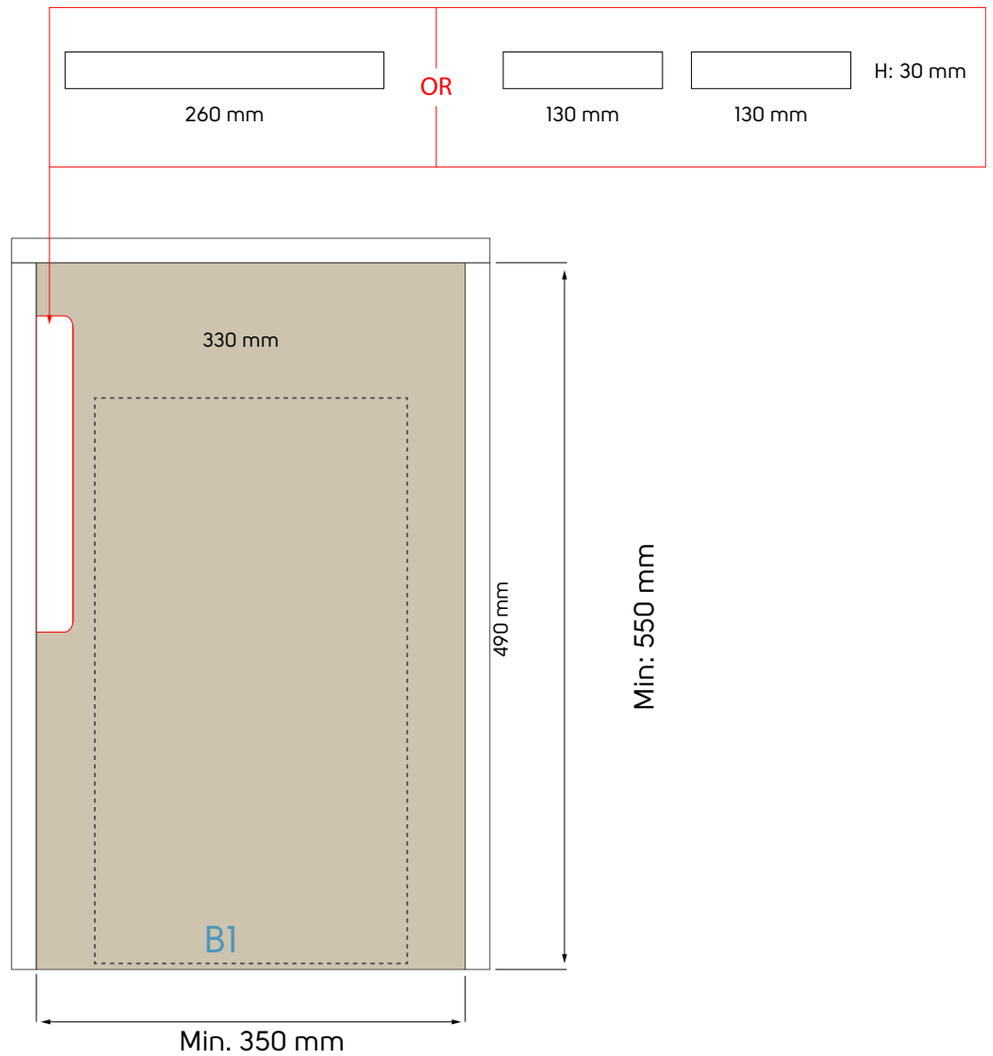

Side

Front

Top View

Carpentry preperations

Special Installation

Special example of behind-the-wall utilizations

Example 1

AIR EXHAUST
SHOULD REMAIN
UNOBSTRUCTED

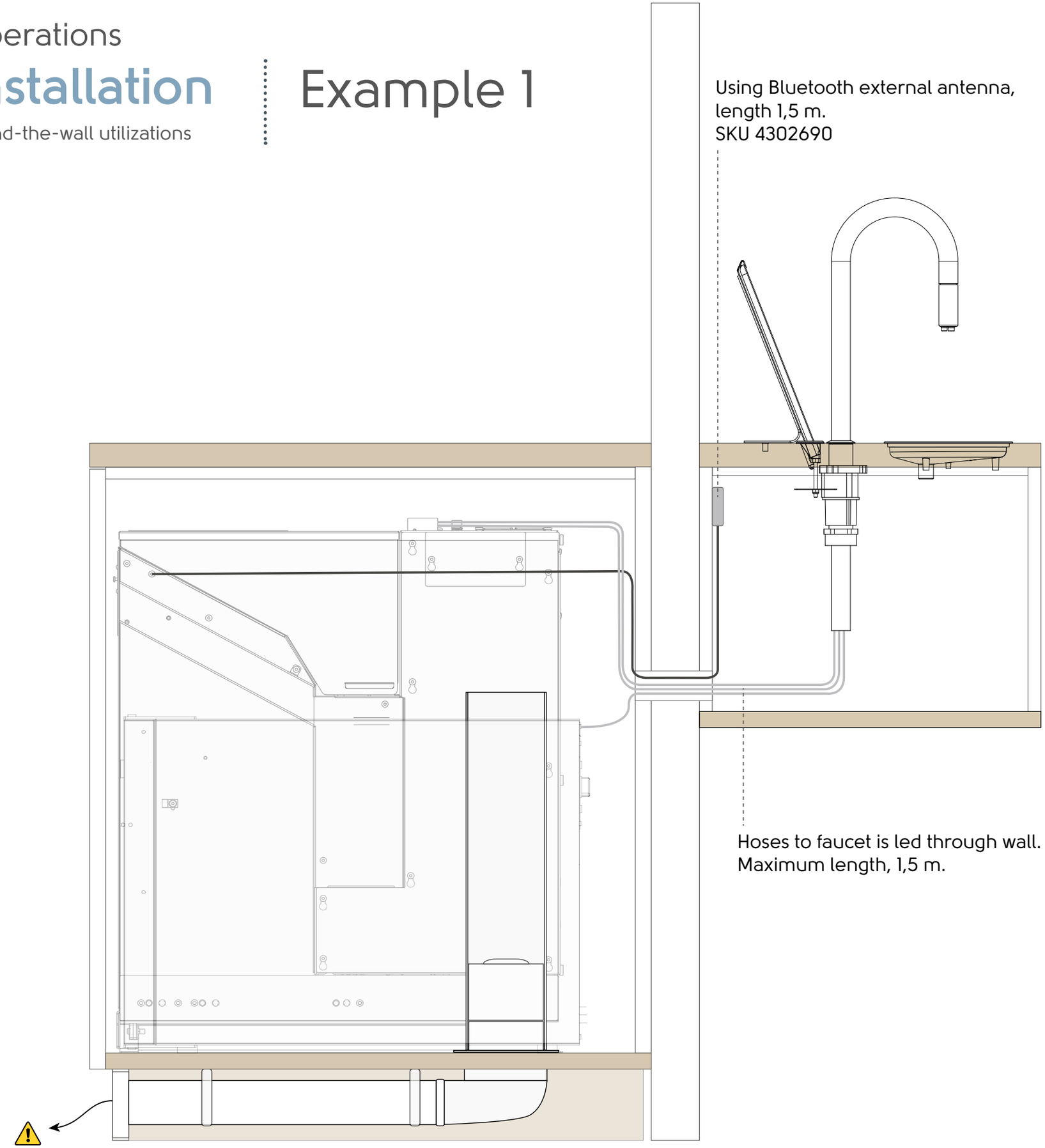

Swan Neck & Driptrays

Overview of positioning

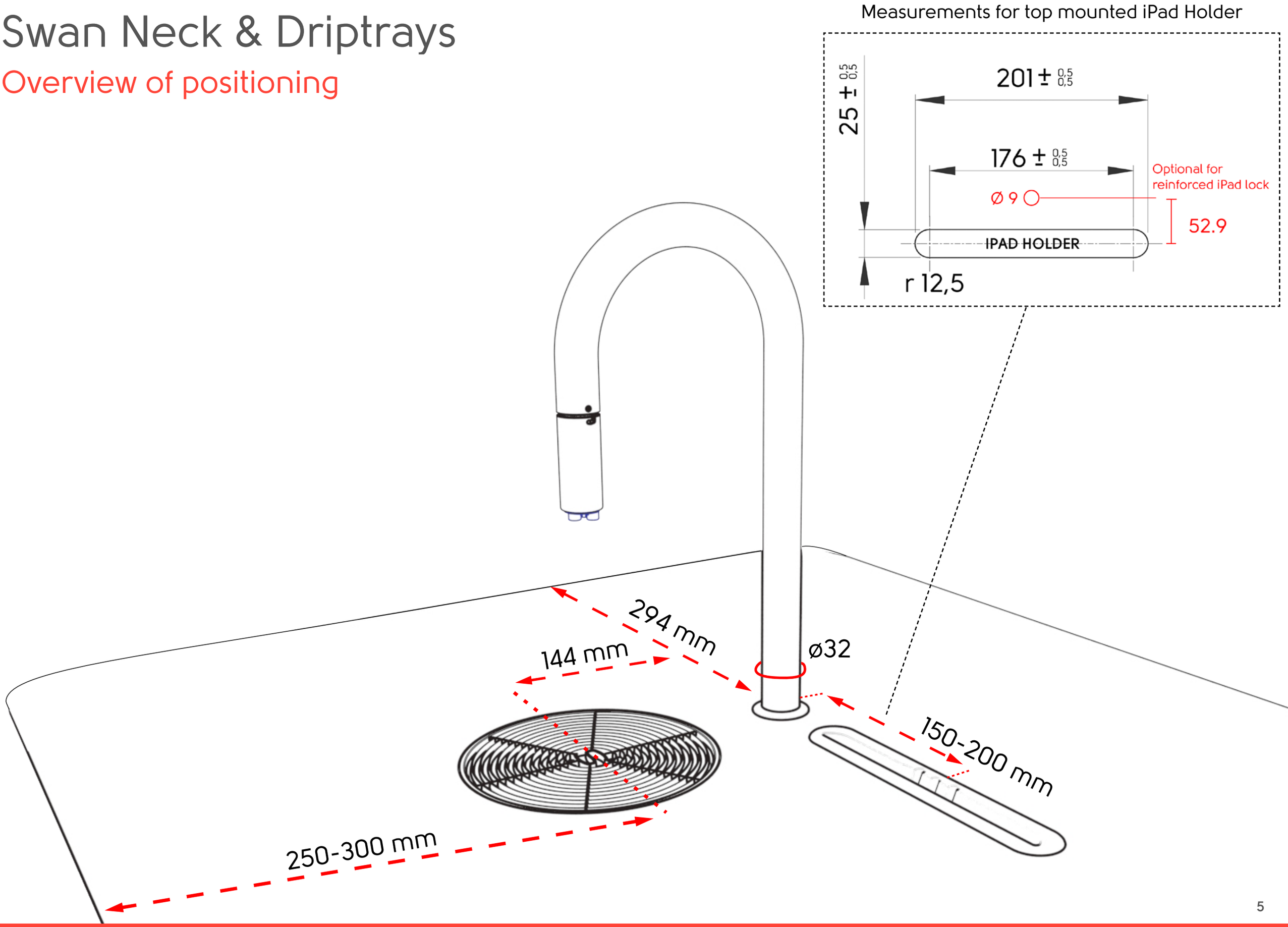

TopWater Standard Edition with pushbuttons

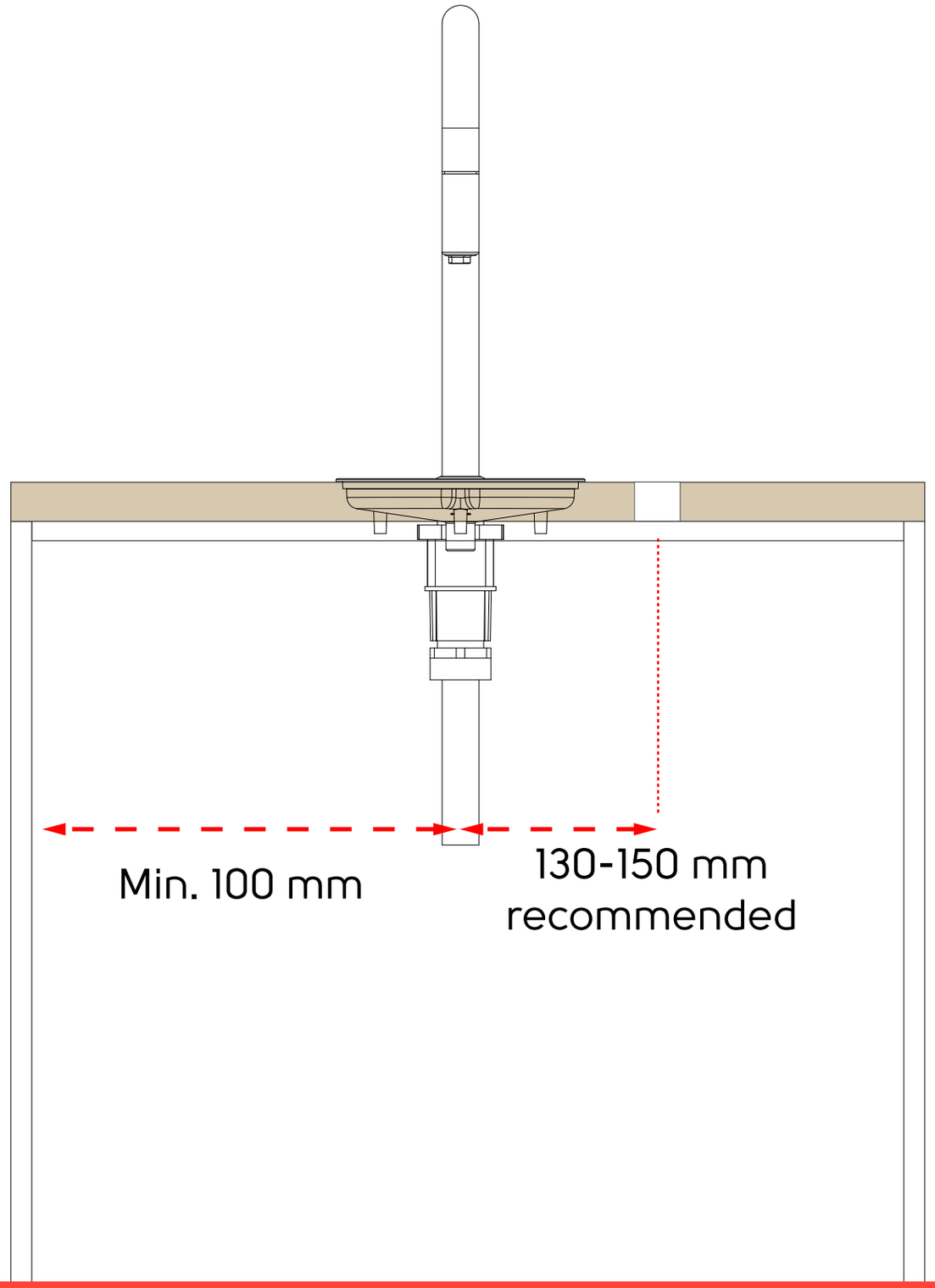

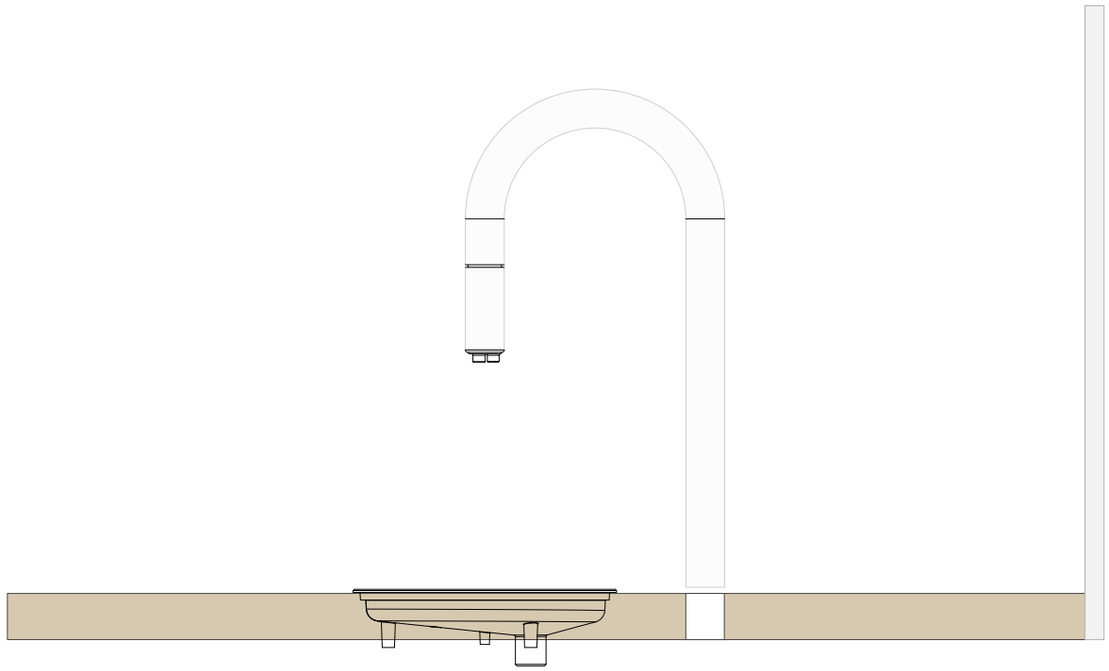

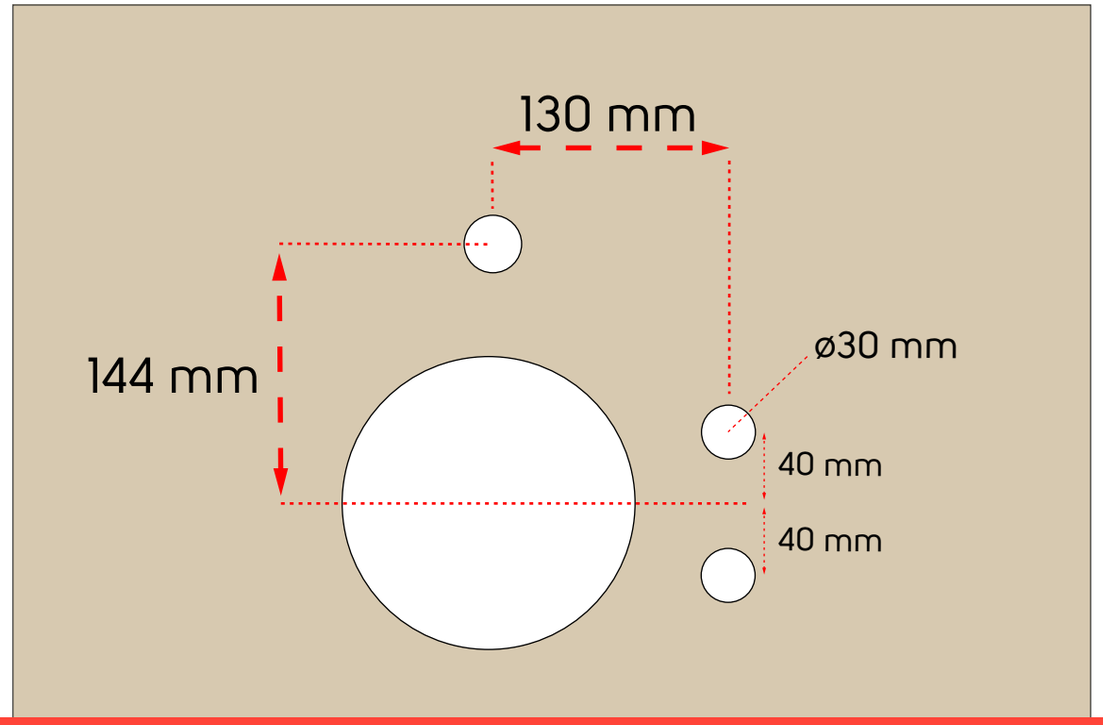

TopWater topmounted iPad Holder + Lock

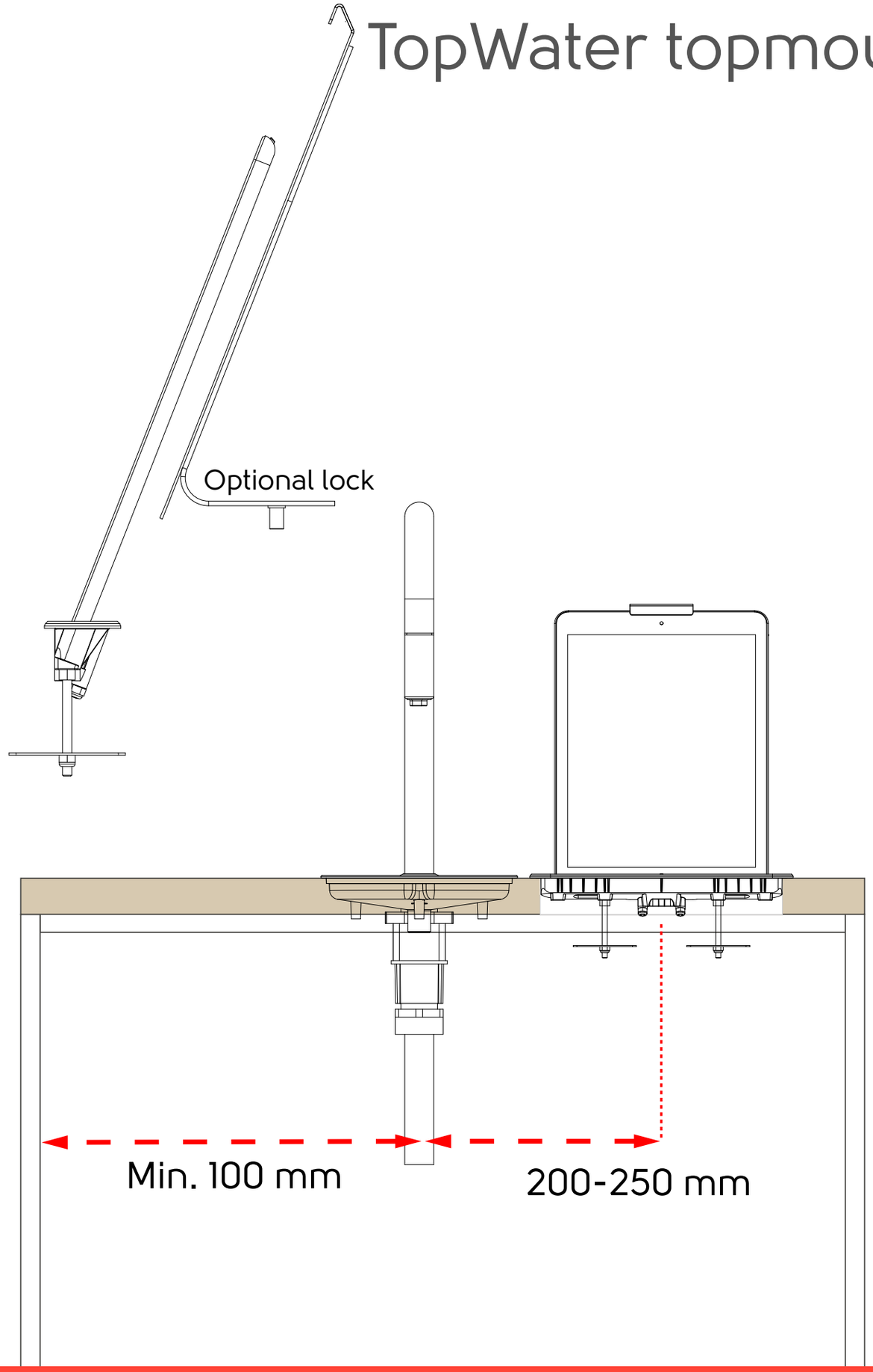

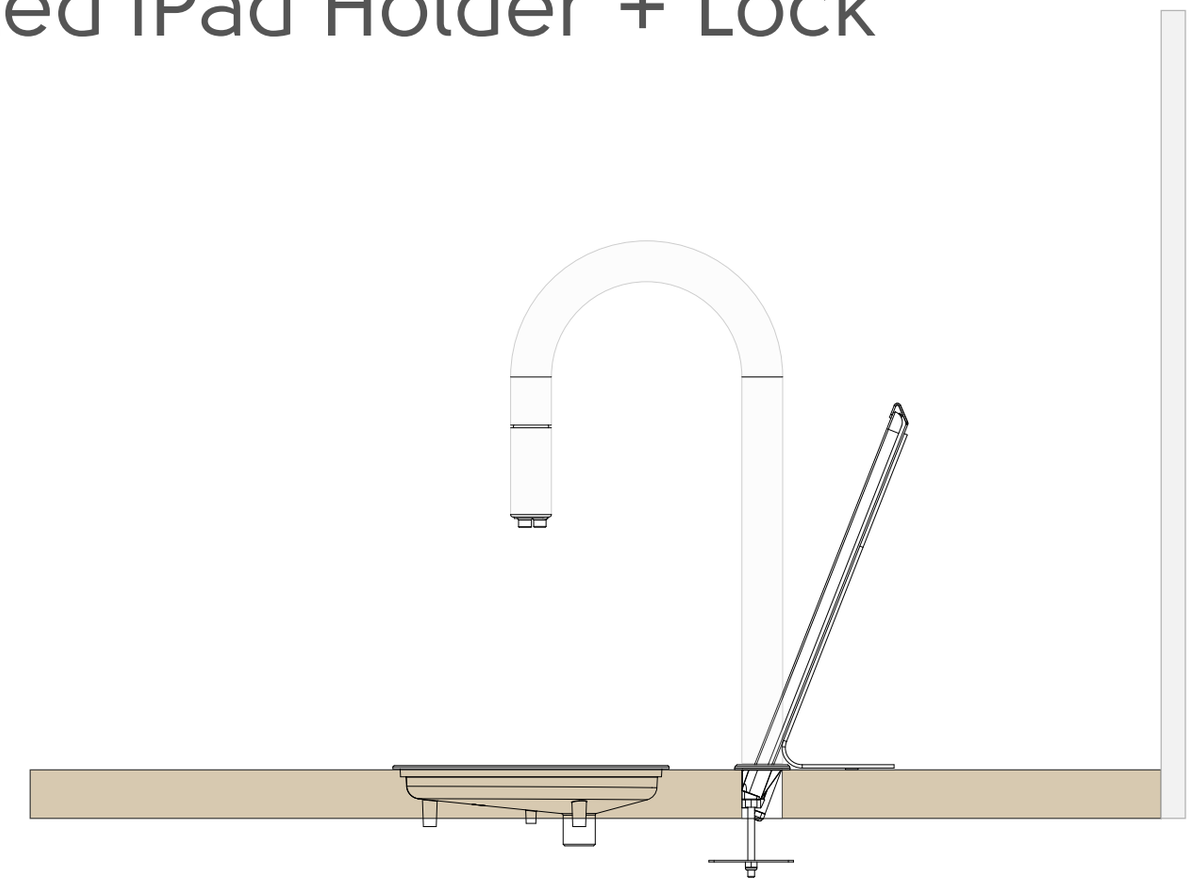

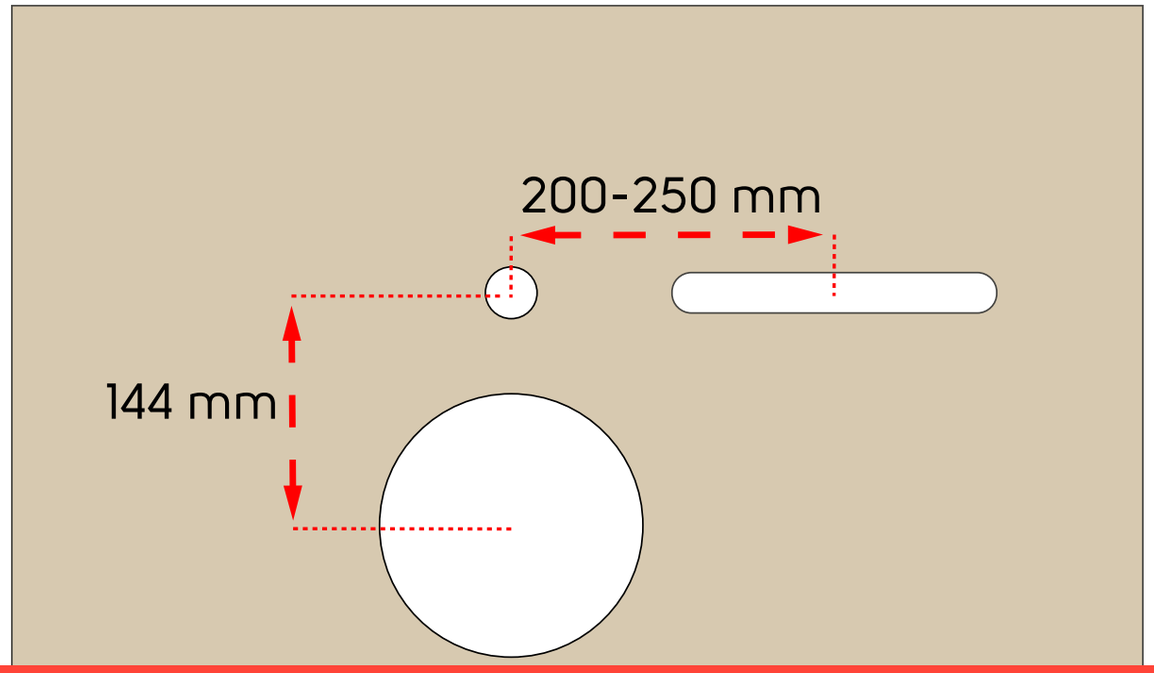

BOXIT (Table Mount or Wall-Mount options)

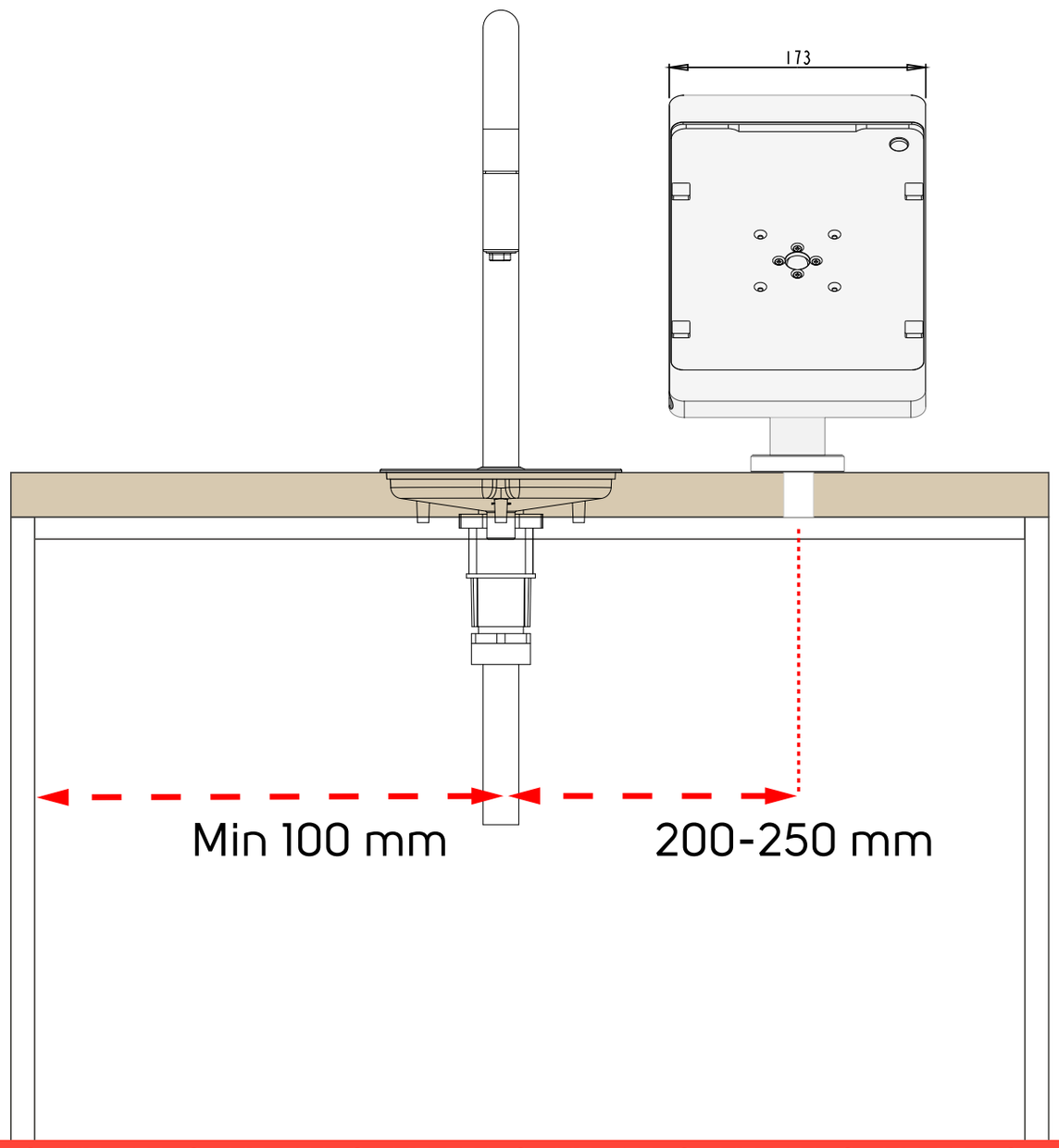

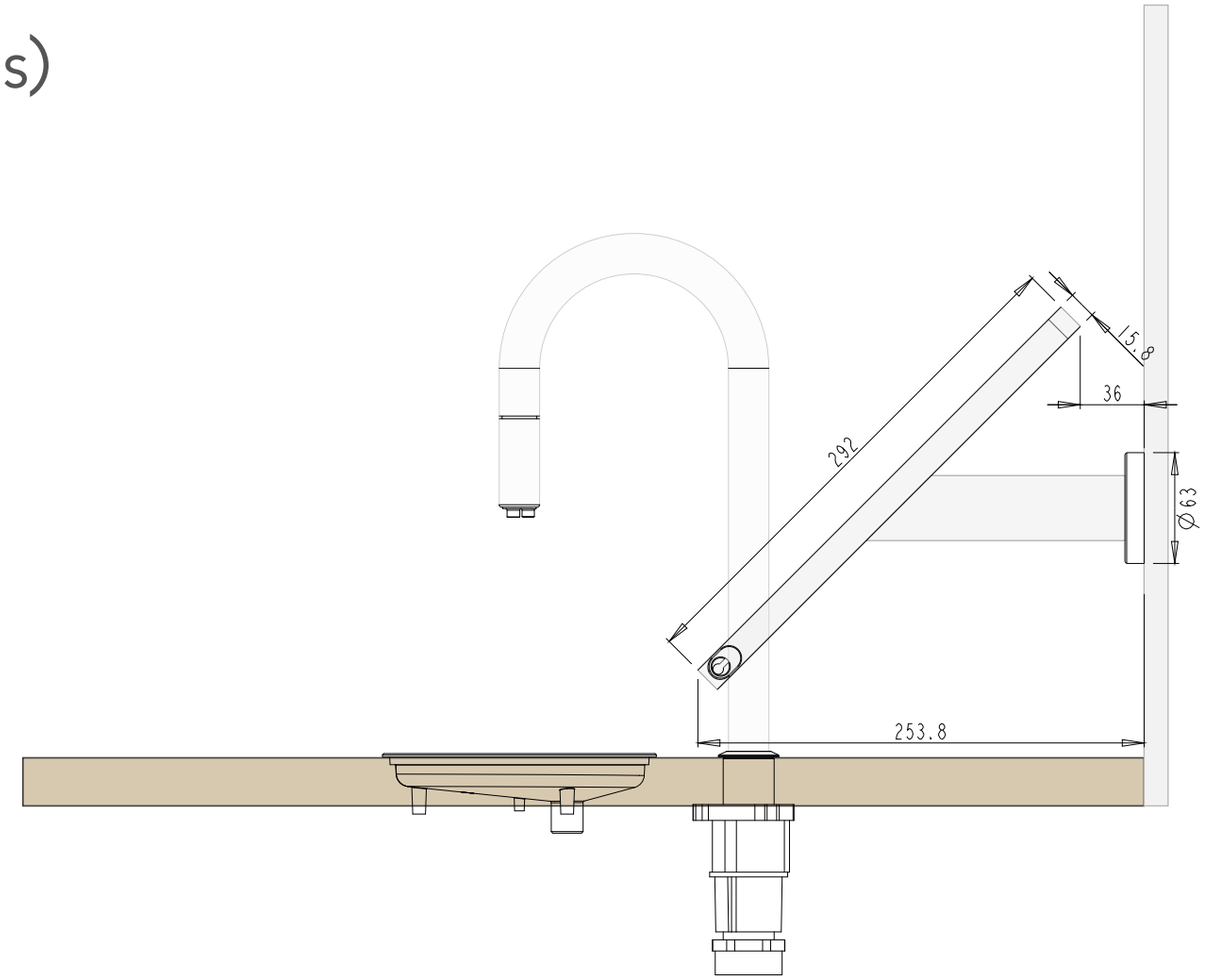

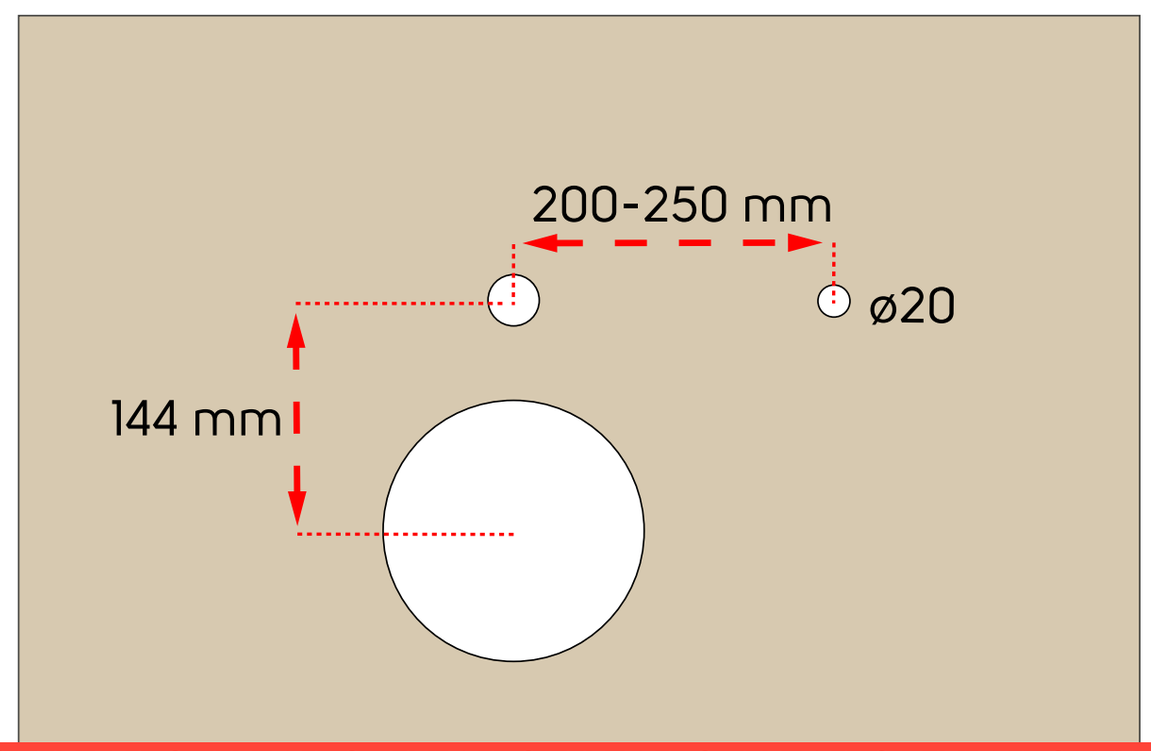

Cut out sheet - Swan neck + Driptray

NOTE that this driptray is best used for water resistent tabletops such as Granite, Marble or Corian. If wood, make sure poures are completely sealed.

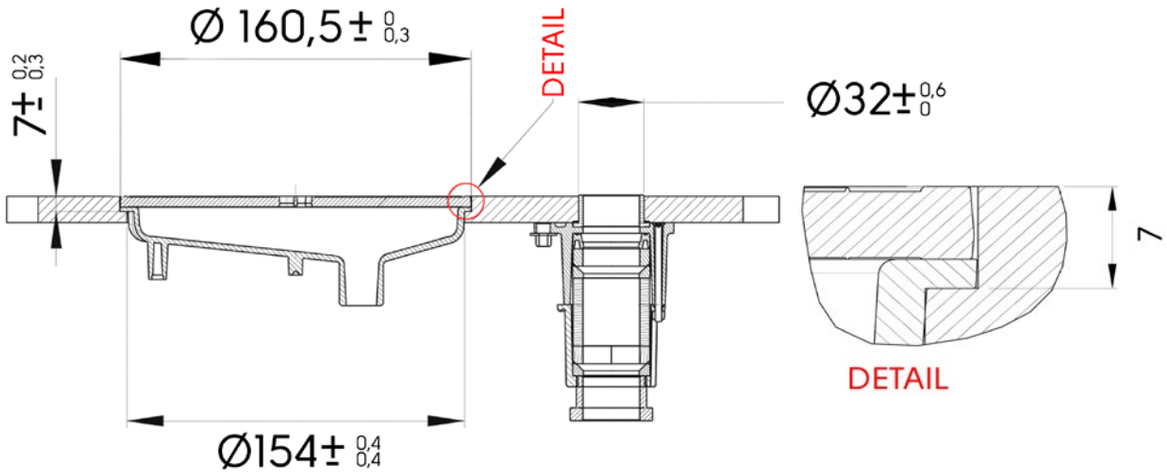

SIDE

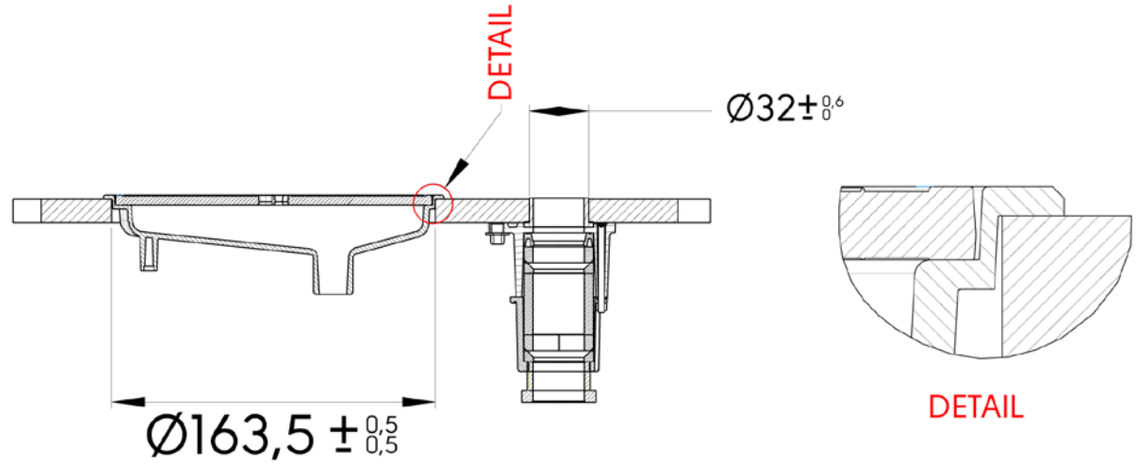

SIDE

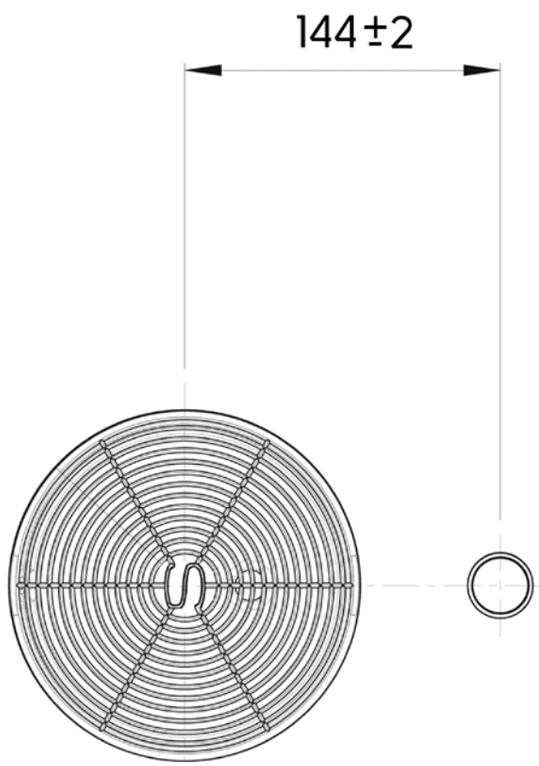

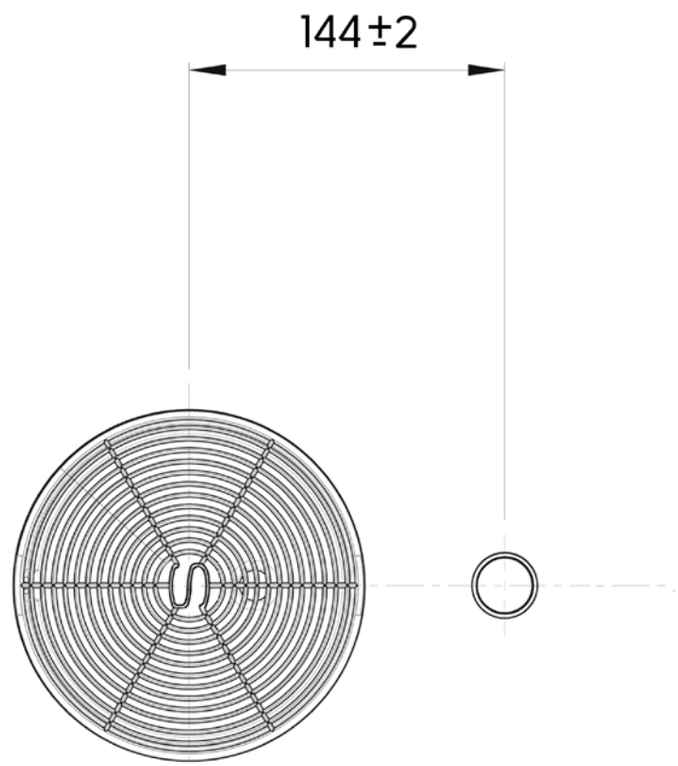

TOP

Flush mounted
- Countersunk -
Driptray 2006162

1

Top mounted
- With Lip -
Driptray 2006162_A

2

ELECTRIC

ELEKTRISK

ELEKTRISCH

電的

Electrical Requirements

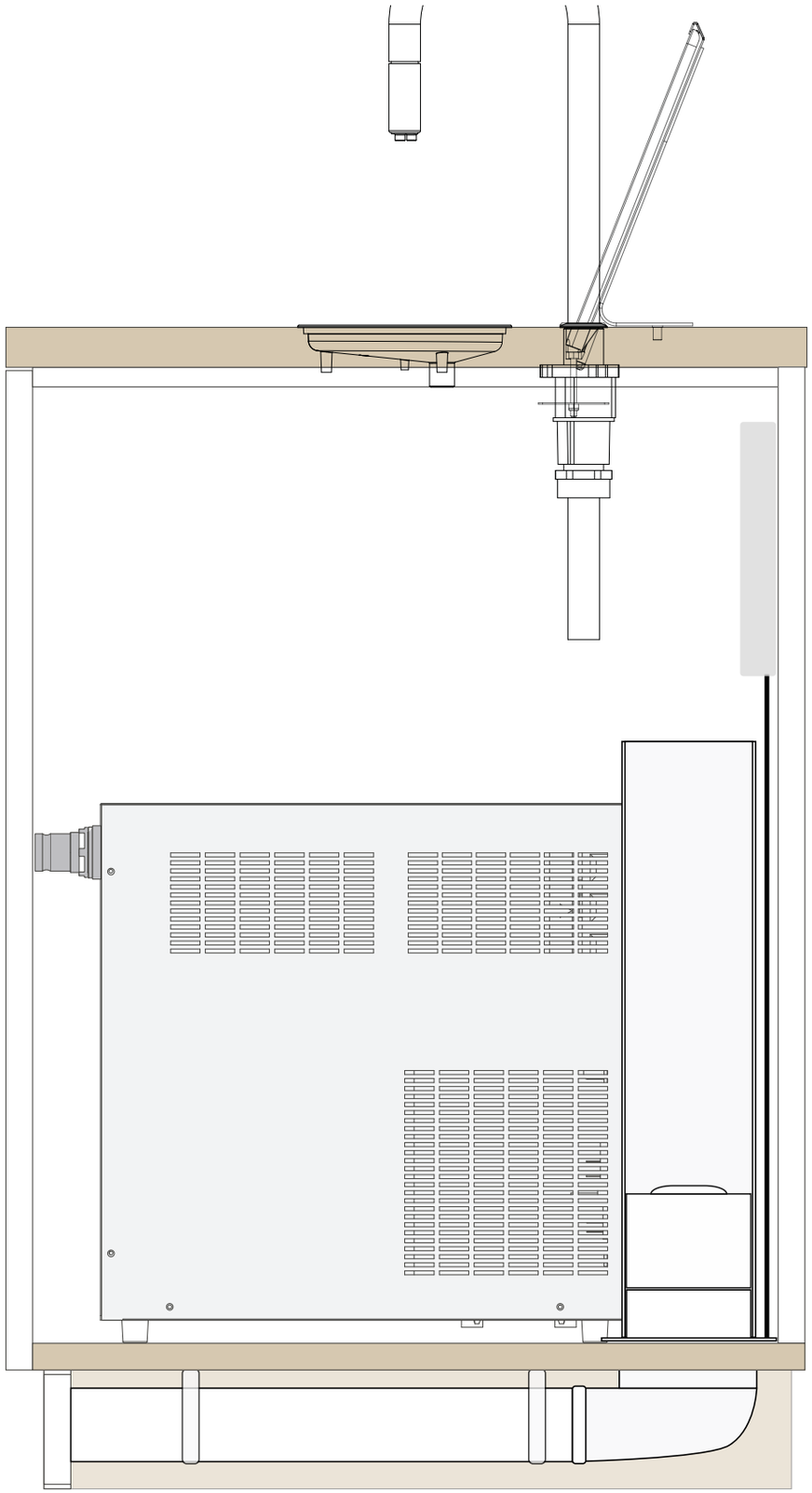

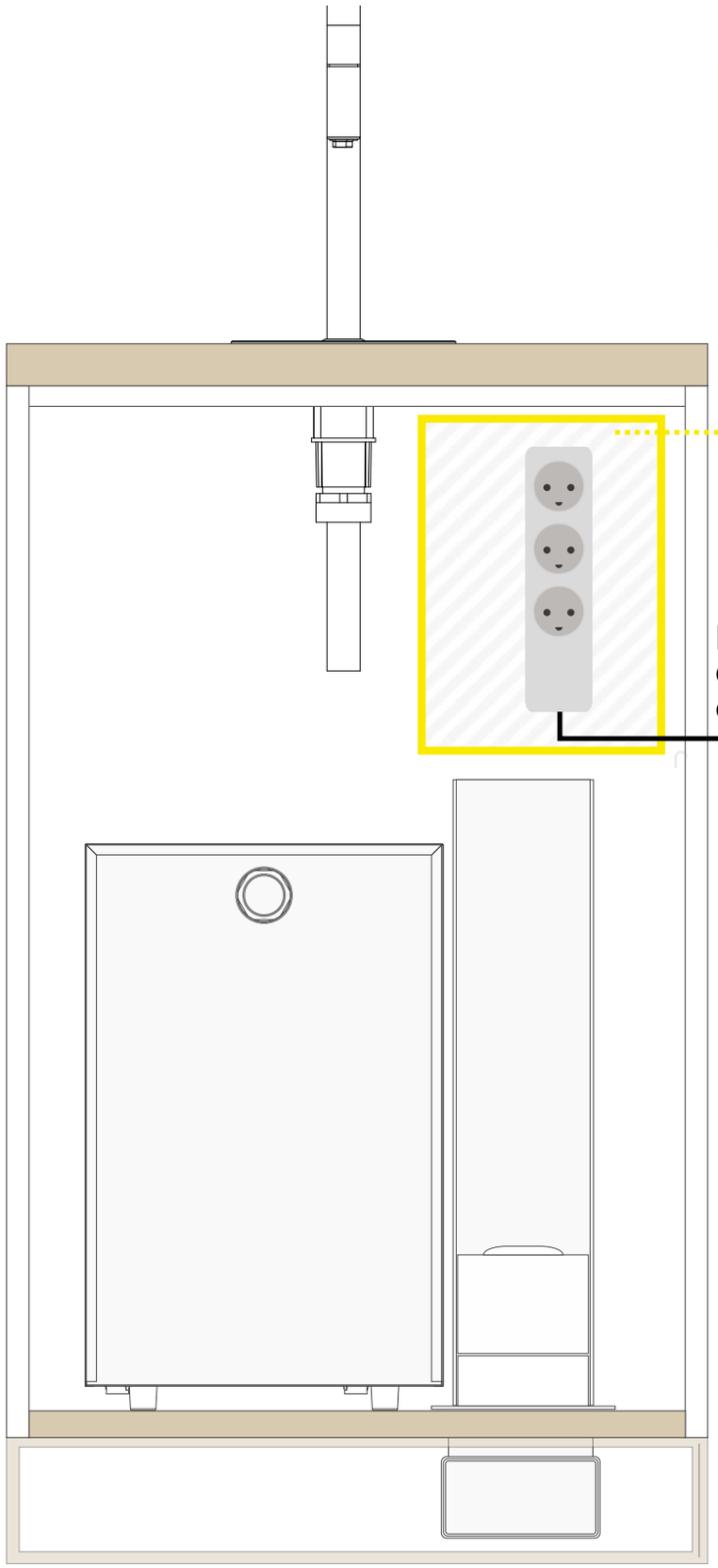

IMPORTANT
Electrical Installations
to be placed here

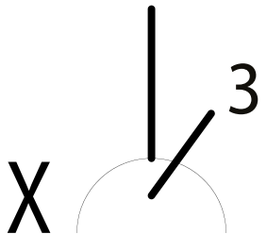

Single phase
230V, 10 amp

US & Canada:
Single phase 115V,
60 Hz, 10 Amp

PLUMBING

VVS

KLEMPNERARBEITEN

水暖

Plumbing option 1

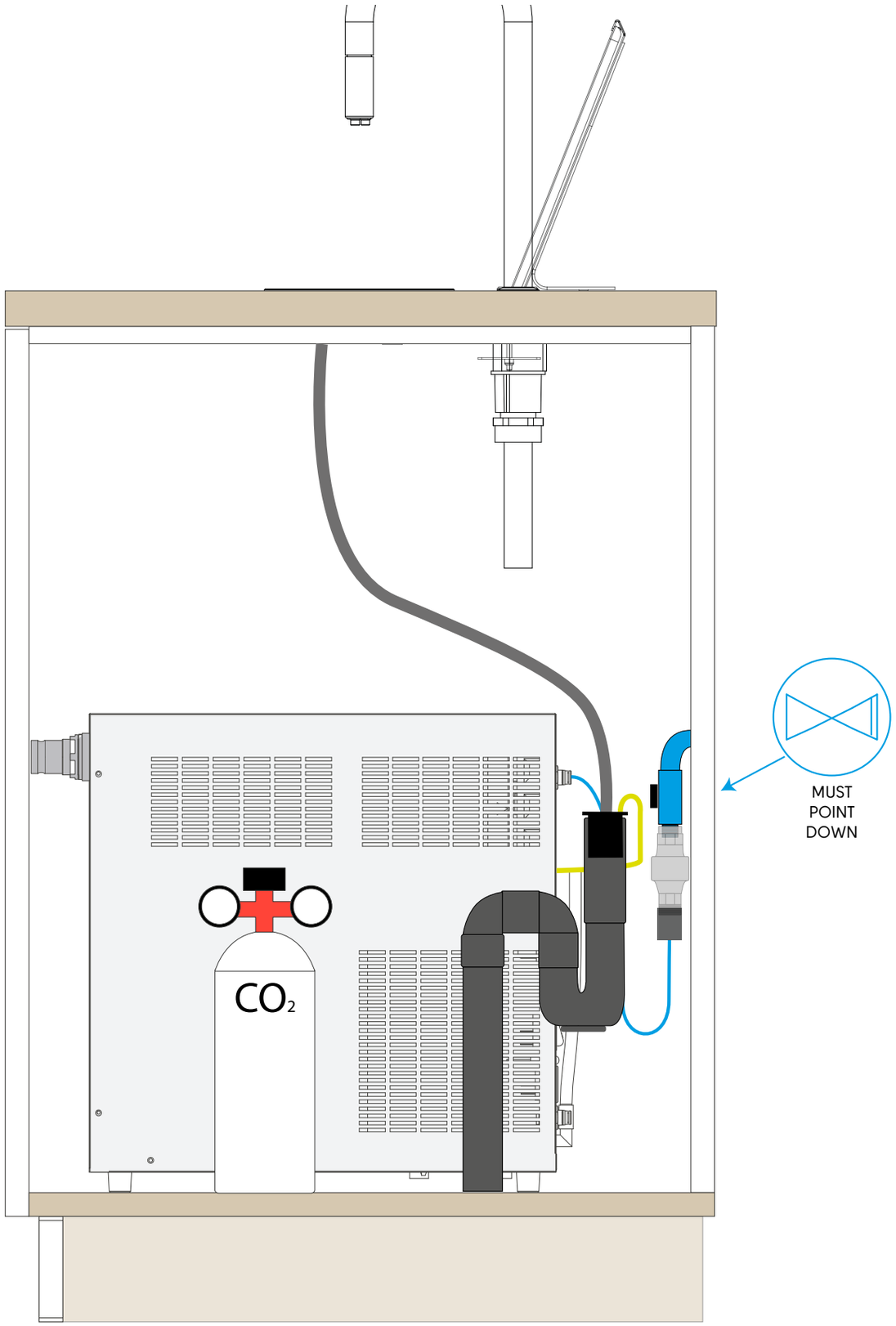

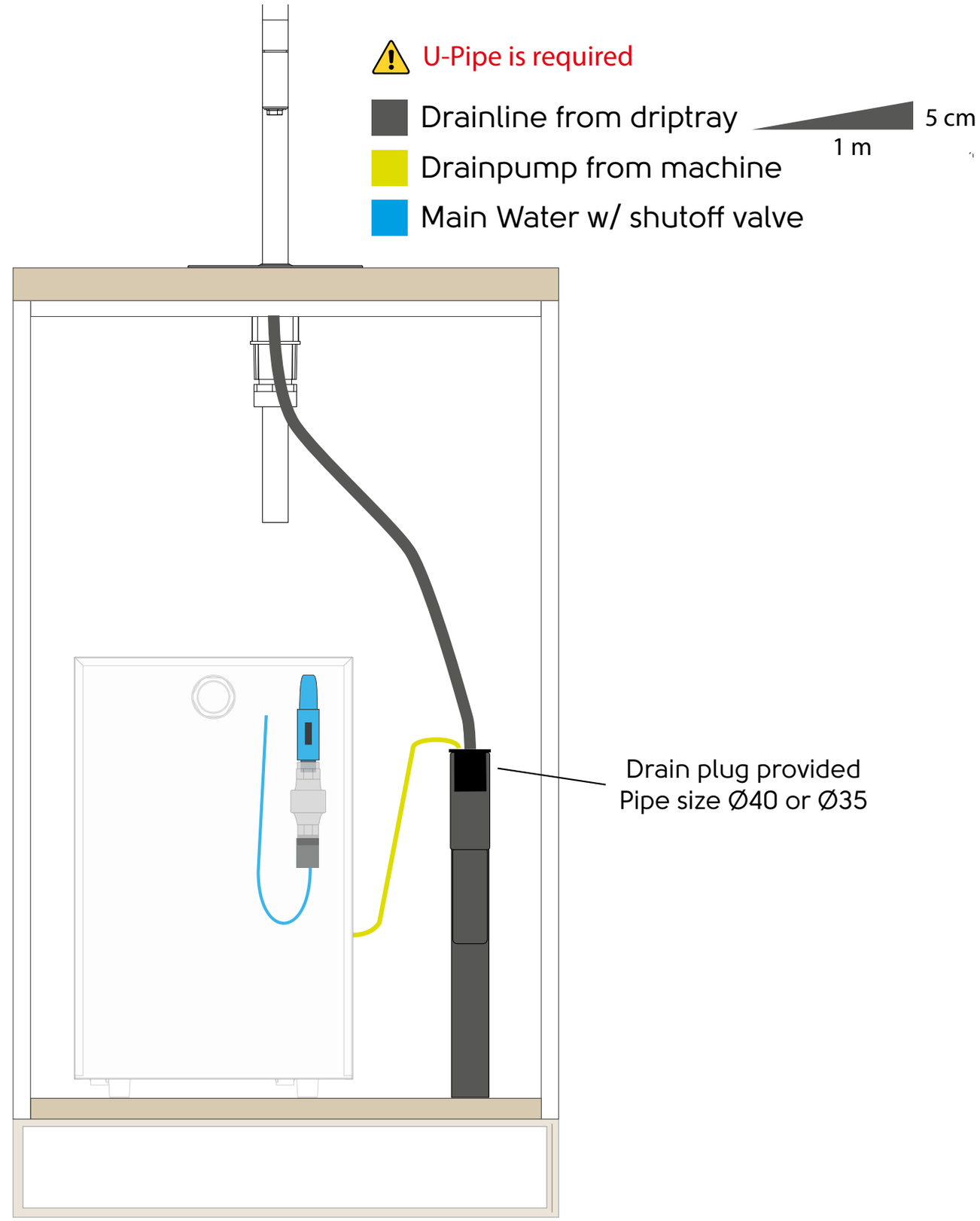

scanomat

coffee solutions for more than 50 years

For more information & questions to your installation,
contact us on the below channels

Tecnical / Architect Support
E-mail: support@scanomat.dk
Chat: www.scanomat.com
International: +454918180
Denmark: +4549181212
Sweden: +46 (0)774 41 0000
Norway: +47 22662210
UK: architect@scanomat.co.uk

Locate Dealer: scanomat.com/services/partners

For TopWater
Version: 1.0
01-02-2020